ELSEVIER

Journal of Chromatography A, 842 (1999) 221–227

JOURNAL OF CHROMATOGRAPHY A

Review

Aspects of the mechanism of the flame ionization detector

Torkil Holm

Department of Organic Chemistry, Technical University of Denmark, DK-2800 Lyngby, Denmark

Abstract

The development of flame ionization detection took place on an empirical basis without a clear understanding of the mechanism. The study of flames by mass spectrometry showed that the all-important ion was the formylium ion CHO^+. The pre-combustion degradation was thought to be a pyrolytic degradation and hydrogenation at the high temperatures obtained close to the combustion zone. Using a capillary probe inside the flame it was recently shown that a degradation of all hydrocarbons to methane takes place at low temperatures by the reaction of hydrogen atoms which are generated in the burning hydrogen. The effects of heteroatoms and of ^2H substitution was studied by the same method. © 1999 Elsevier Science B.V. All rights reserved.

Keywords: Flame ionization detection; Detection, GC; Reviews

Contents

1. Historical development 221
2. Ion production in flames 222
3. Precombustion degradation in the flame 222
4. Isotope effects in the flame ionization detector 225
5. Heteroatom effects 226
References 227

1. Historical development

Flame ionization detection (FID) is more used in gas chromatography (GC) than any other method for signal detection. The detector has been in use for almost 40 years since its introduction in 1958 in New Zealand [1].

FID works because the burning of carbon compounds produces ions. When a carbon compound is eluted from the GC column into the hydrogen flame of the detector current will pass between electrodes placed near the flame and held at a suitable potential. This gives a recordable signal. There are several reasons for the success of FID. It has a very low noise level, it has a linear response over a very wide range, its sensitivity is high and the optimized response varies very little with factors such as detector temperature, flow-rates of hydrogen and carrier gas, and other parameters.

Since the burning of pure hydrogen does not produce ions, the baseline signal of an FID system is near zero and is mostly caused by impurities in the hydrogen and the carrier gas. Typically the main impurity is ‘‘bleeding’’ from the column. A minimum detectable signal (MDS) may therefore be obtained from extremely low sample concentrations

0021-9673/99/$ – see front matter © 1999 Elsevier Science B.V. All rights reserved.
PII: S0021-9673(98)00706-7

and the response increases linearly over a very large range up to 10^6 to 10^7 times the MDS. A final advantage of the detector is that the response is predictable. The FID system is a ''carbon counting device'' because hydrocarbons give responses in proportion of the number of carbon atoms. This is called the rule of equal response per carbon.

FID was developed on an empirical basis, without knowledge about the nature of the ions collected or about the processes taking place in the flame.

Two essential questions had to be answered in order to understand the mechanism of FID. The first was: which type(s) of ions are formed in the combustion zone of the flame? The second was: which sort of chemical transformations take place during the passage of the hydrogen solutions of additives through the pre-combustion zones of the flame?

Ion formation in flames was a problem in the development of space rockets after 1950 since radio contact was lost during firing. This created an interest in flame chemistry at the same time that FID was put to use in 1957 and FID studies were essential for obtaining information about the phenomenon.

2. Ion production in flames

Since spontaneous thermal ionization of most organic molecules was considered unlikely, aggregates of carbon atoms were for a period suggested as being the source of ions [2]. It was assumed that they, like graphite, had a sufficiently low ionization potential. The theory was discarded because the yield of ions was far too high and because there was no correlation between conductivity and the rate of carbon formation in the various zones of a flame.

The problem was approached experimentally by the use of mass spectrometry (MS). Ions were accelerated from a flame directly into the instrument, which was put at a high negative potential. Advanced techniques allowed high resolution and sensitivity [3,4]. The conclusion made on the basis of the experiments was [5], that the ion formation in flames is primarily a chemi-ionization of CHO* resulting from the reaction of O with CH:

$$CH + O \rightarrow CHO^* \rightarrow CHO^+ + e^- \quad (1)$$

The yield of ions is of the order of one per 10^6 carbon atoms [6]. Since the detector is designed to give 100% collection of the ions produced, 1 g of carbon generates about 0.01 coulomb.

The distribution of ions observed needed interpretation since reactions of the primary ions with molecules changed the composition for example by proton transfer to and by association with water molecules:

$$CHO^+ + H_2O \rightarrow H_3O^+ + CO \quad (2)$$

$$H_3O^+ + nH_2O \rightarrow H_3O^+, nH_2O \quad (3)$$

One hundred percent collection of ions is essential for the operation of the detector and recombination with electrons must be avoided as well as ion multiplication by impact of accelerated electrons. Proton transfers or association reactions of the ions with water molecules are, however, no problem if the number of ions is maintained.

3. Precombustion degradation in the flame

The detector response is linearly dependent on the amount of additive, for example a hydrocarbon, regardless of its composition. At the same time the response obeys the ''equal per carbon'' rule. The two facts very strongly indicate that a degradation takes place in the flame before the combustion zone is reached. It seems obvious that one and the same ''key substance'' must be produced from all hydrocarbons and that the key substance is a one carbon fragment.

Since the all-important ion, CHO^+, contains hydrogen it could be concluded that the key substance had to be one or more of the four possible C_1H_x. But its exact nature remained a problem until recently. Since the fractionation was thought to occur at very high temperatures and the lifetime of the species were thought to be measured in μs rather than ms an experimental approach to the problem was not attempted, but theories were put forward based on indirect evidence. In 1962, Sternberg et al. [7] in a very thorough review of all aspects of the mechanism of FID suggested that flame degradation of carbon compounds led to an equilibrium mixture of

all four 1-carbon fragments. The pyrolysis was supposed to be initiated by back diffusion of hydrogen atoms and the molecules would undergo accelerated cracking processes following essentially the Rice–Hertzfeld scheme [8]. This would ''lead to an extent of fragmentation essentially equivalent for different molecular species, but the eventual cracking pattern obtained would be dependent upon the original bond structure of the sample molecule.''

In two articles in 1973 and 1976, Blades presented mechanistic studies on the mechanism of FID and confirmed [9,10] that for many additives there is a close correlation between the emission from excited CH^* in an FID flame and the detector response obtained by ion collection. Though the author considered methyl radical as the universal 1-C fragment responsible for the equal per carbon rule he also considered alternative ion forming reactions. Based on reports on abnormally high values of the molar response of ethyne, a special route to ionization was suggested for this compound via CH_2:

$$C_2H_2 + O \rightarrow CH_2 + CO \quad (4)$$

$$CH_2 + O_2^* \rightarrow CHO^* + OH^- \quad (5)$$

or

$$C_2H + O_2^* \rightarrow CHO^+ + CO + e^- \quad (6)$$

Nicholson in 1982 on the basis of computer simulation of the degradation process at 1800 K demonstrated that all aliphatic hydrocarbons would degrade to methane [11]. A universal role for methane as the key substance was not possible, however, since ethyne and ethene would not degrade to methane at 1800 K. It is well known that ethyne is easily formed from methane at this temperature. A temperature dependent equilibrium exists between ethyne, methane and hydrogen:

$$C_2H_2 + 3H_2 \rightleftharpoons 3CH_4 \quad (7)$$

The formation of methane is exothermic and ethyne is favoured at high temperatures, Fig. 1. A very large excess of hydrogen as obtained in the FID hydrogen flame favours the methane side in reaction 7, but the time available in the reaction zone of the flame at 1800 K (ca. 100 μs) is by far not sufficient for establishing the equilibrium.

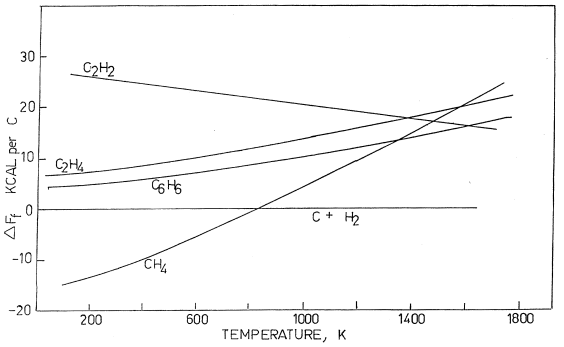

Fig. 1. Rerlative thermodynamic stability of hydrocarbons on a per carbon basis, 1 cal = 4.184 J.

The ''equal per carbon response'' of FID therefore remained a mystery. Adding to the confusion was the report that ethyne was an exception to the rule and that the relative molar response (RMR) of this compound was 2.6 and not 2.0. This led to the suggestion of the alternative ion forming reactions shown above.

An experimental approach to the problem was made in 1997 [12]. Additives were mixed with hydrogen and heated to flame temperatures (ca. 1400°C) in quartz capillaries after which the resulting gas was analysed by GC. The hydrocarbons among the 14 additives yielded mixtures of methane, ethyne and ethene, Table 1. It was obvious that the reaction time (ca. 100 μs) was insufficient for obtaining the equilibrium, which at the concentration used would contain about 80% methane and 20% ethyne and traces of ethene. The mixtures obtained were dominated by methane if the additive was a saturated alkane and dominated by ethyne and ethene is the additive was unsaturated or contained heteroatoms. Additives which contained oxygen produced carbon monoxide and presumably water. Nitrogen containing additives produced hydrogen cyanide, and halogen containing compounds produced hydrogen halides. The results were an experimental confirmation of the predictions made by Nicholson and demonstrated that conversion of ethyne and ethene to methane by reaction with hydrogen at 1400°C requires at least 100-times more time than available in the flame.

Another series of experiments were performed

Table 1
Relative molar distributions (GC) of hydrocarbons obtained by heating vapours of volatile compounds to 1400°C for ca. 500 μs in an excess of hydrogen

Additive	Methane	Ethene	Ethyne	Non-hydrocarbons
Methane	100			
Butane	100			
Cyclohexane	100			
Ethene	37	16	47	
Ethyne	21	16	63	
Isobutene	80	8	12	
Benzene	45	13	42	
Naphtalene	90	3	7	
Methanol	100			CO
Ethanol	82	7	11	CO
Ethylamine	74	12	14	HCN
Ethyl bromide	29	8	63	HBr
Dichloromethane	100			HCl
Acetone	100			CO

Non-hydrocarbons were determined qualitatively.

with heating of additives in hydrogen in the burning flame exactly as in FID. In this case the fate of the additives was followed by taking samples from the interior of the flame through a thin quartz capillary probe which was inserted through the orifice into the bottom of the flame, Fig. 2. The capillary was connected to the ion source of a mass spectrometer. By moving the probe up and down, the fate of the additives could be followed at every stage of the precombustion degradation. The results were surprising, especially compared with the hydrogenolysis in a capillary. For example a mixture of 0.0049% (v/v) of benzene in hydrogen was burned at a rate of 16 ml/s producing a flame of about 30 mm. The intensity of the m/z 78 peak was measured when the tip of the probe was placed just below the orifice of the burner. After raising the probe to 4.5 mm above the orifice the signal for benzene was very weak and the m/z 84 peak for cyclohexane showed up with an intensity corresponding to near quantitative conversion. A small percentage of cyclohexene was also detected. When the probe was raised a further 2 mm the cyclohexane signals disappeared, while the m/z 16 and 15 peaks of methane were observed. The conversion of benzene to methane was quantitative. As the probe was raised in the inner core of the flame, increasing amounts of nitrogen and water were detected, whereas the oxygen concentration was lower than that of the sample mixture, as measured below the orifice. A quantitative conversion of benzene to methane was obtained also at a concentration of 0.01%, while only 25% conversion to methane was found using 0.01% benzene in hydrogen. The flame investigations were performed

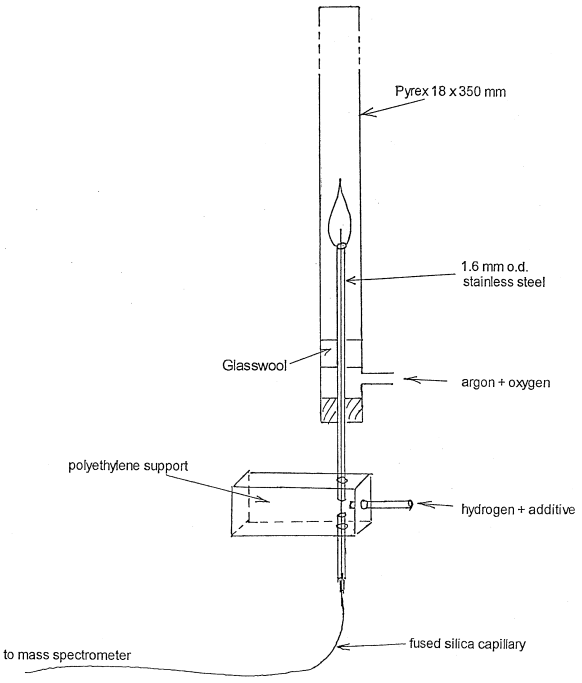

Fig. 2. Hydrogen flame assembly with the fused-silica probe entering the flame from the bottom, mounted with a pyrex mantle for use in an argon/oxygen atmosphere.

also with ethyne and isobutane. Quantitative conversion of ethyne to methane was observed at concentrations of 0.0313 and 0.0625%. Very likely ethyne is reduced to ethane followed by hydrogenolysis of the C–C bond, but ethane was not observed at any position of the capillary. Also isobutane was quantitatively converted to 4 mol of methane at 0.0048%. In accordance with this the plots of concentration versus detector had slopes very close to 1:2:4 (Fig. 4). That the equal per carbon rule was exactly obeyed for ethyne did not agree with older observations [7], see Table 1.

Measurements of the flame temperature at various positions (Fig. 3) showed that the hydrogenolysis of C–C bonds, which required 1000°C in the capillary, takes place below 600°C inside the flame and hydrogenation of benzene to cyclohexane occurs at 400°C. These results are due to the presence of rather large concentrations of hydrogen atoms produced in the combustion zone. Due to their high mobility they diffuse to the inner part of the hydrogen stream.

The degradation of hydrocarbons in the FID flame is then not pyrolytic, but results from attack by hydrogen atoms. Carbon–carbon multiple bonds are reduced and the saturated carbon atoms are attacked with fission of the C–C bond e.g.,:

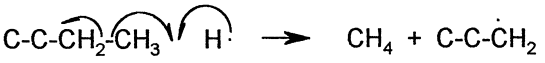

A strong C–H bond is thus formed at the cost of a weaker C–C bond. The radical formed is unstable

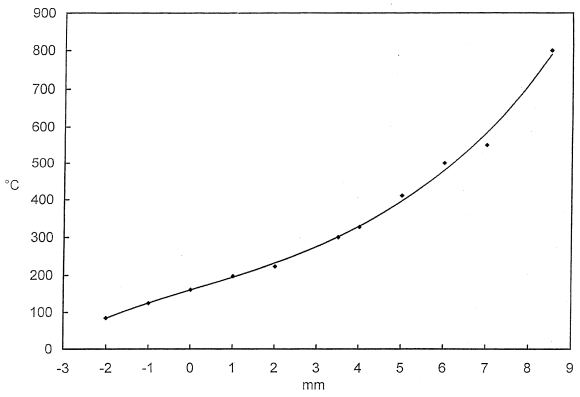

Fig. 3. Temperature in a standard hydrogen flame (see Section 3) at the indicated positions above the orifice of the burner, as measured using a calibrated iron–constantan thermocouple with 0.05-mm leads.

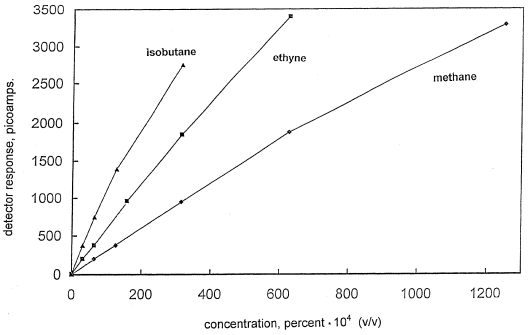

Fig. 4. Detector response in picoamperes of mixtures of additives at various concentrations using a HP 5890 gas chromatograph. Flow 28 ml/min.

and undergoes fast fractionations and hydrogenations so that all carbon are converted to methane. Methane has the strongest C–H bonds of all hydrocarbons and is the logical end point in the reaction with an excess of hydrogen atoms.

4. Isotope effects in the flame ionization detector

With the exception of methane the response obtained with a fully deuterated hydrocarbon is identical with the response of the parent hydrocarbon [13]. The reason for this is that the degradation process in FID is accompanied by isotopic exchange processes of hydrogen atoms. Using the probe sampling technique it was found that $H/^2H$ exchange in benzene and cyclohexane takes place at 300–400°C. This apparently occurs by repeated sequences of addition/elimination. Non-cyclic hydrocarbons do not exchange until 700°C, and here the exchange is assumed to take place in the free radical fragments, formed by the rupture of C–C bonds since bond rupture and $H/^2H$ exchange sets in at the same temperature. $H/^2H$ exchange in methane requires higher temperature and probe experiments were difficult because sampling near the combustion zone resulted in large water peaks in the mass spectrum at m/z 17, 18 and 19. This compromised the observation of the deuteromethanes although a high degree of exchange was clearly observed. Near complete exchange could be inferred from Blades observation of normal CH emission from an FID flame, when C^2H_4 was added to the hydrogen [10].

That $^{2}H/H$ exchange is not 100% is, however, obvious, since the response from deuterated methane is higher than from normal methane. Table 2 gives values measured for the RMR for various compounds and for their deuterated analogs. From the results it may be calculated that the response of $C^{2}H_4$ is 3.5% higher than that of CH_4.

Methane is the most thermostable hydrocarbon. Undiluted methane is unchanged at 500°C, but decomposes at 700°C with the formation of polycyclic aromatic hydrocarbons and hydrogen. When highly diluted with hydrogen, methane is stable up to 1000–1100°C. Methane may be assumed to pass through the precombustion zone of the FID flame partly unchanged and deuterium labelled methane is even less reactive.

Why the prolonged lifetime of labelled methane in the flame gives rise to an increased production of ions is an open question. According to reaction 1 the product of the concentrations of CH and O is decisive for the rate of formation of CHO^{+}. If the stripping of methane by H atoms is delayed it may reach its maximum in a zone in the flame which is richer in O. Alternatively the yield of CH (or $C^{2}H$) may be higher if the stripping is delayed. As mentioned above the yield of ions is only 1 per 10^{6} methane molecules.

The isotope effect on the fraction of methane molecules which escape isotopic exchange must be the main reason for the effects listed in Table 2, but other effects interfere. The kinetic isotope effect for reaction (1) for example must be $k_H/k_D<1$.

Table 2
Relative molar response (RMR) in the FID of isotopically labelled compounds

Type of labelling	RMR
$^{12}CH_4/^{12}C^{2}H_3H$	0.981±0.005 (8)
$^{13}CH_4/^{12}C^{2}H_3H$	1.002±0.007 (8)
$^{12}CH_4/^{13}C^{2}H_3H$	0.949±0.009 (2)
$^{13}CH_4/^{13}C^{2}H_3H$	0.980±0.006 (2)
$^{13}CH_3D/^{12}C^{2}H_4$	0.985 (1)
$^{12}CH_4/^{12}C^{2}H_4$	0.966[a]
$C_2H_6/C_2^{2}H_5H$	0.997±0.008 (2)
$C_6H_6/C_6^{2}H_6$ (benzene)	0.995±0.008 (4)
$C_6H_{12}/C_6^{2}H_{12}$ (cyclohexane)	0.997±0.009 (4)
$C_{12}H_{10}CO/C_{12}^{2}H_{10}CO$ (Ph_2CO)	0.995±0.007 (2)

Standard deviations are given and in parentheses the number of determinations. For double experiments the deviation from mean is shown.
[a] Estimated.

A prolonged survival in the flame must also be the reason for the increase in RMR for ^{13}C-labelled methane [1].

5. Heteroatom effects

The equal per carbon rule is valid for hydrocarbons only. A carbon atom which is associated with a heteroatom often gives a less than normal contribution to the response. Empirical rules have been formulated for the ‘‘effective carbon number’’ (ECN) for the various types of functional groups [7,14,15] (see Table 3). A chemical explanation is obtained from the study of the processes in the interior of the flame [12,13]. The study of hydrogenolysis at 1300°C showed that for example alcohols, ketones, and esters produce methane, ethene, ethyne and carbon monoxide. Amines produced the three hydrocarbons and hydrocyanic acid and halogen compounds produced hydrocarbons and hydrogen halide. Hydrogenolysis in the flame converted the hydrocarbons quantitatively to methane at temperatures below 700°C. A carbon bonded to a heteroatom may or may not be converted to a methane molecule by flame hydrogenolysis. Since carbon monoxide gives zero response in FID and hydrocyanic acid gives a very low response, a diminished ECN should be expected for substituted compounds if hydrogenolysis in the flame also produce CO and HCN. If a quantitative analysis was possible, a correlation could be made between the observed RMR and the sum of the responses of the flame produced entities.

That the RMRs for alcohols vary with the alkyl is a consequence of competition between hydrogenation of the C–O bond and hydrogen abstraction with formation of carbon monoxide. For methanol:

$$CH_3\text{-}OH + 2H^{\bullet} \rightarrow CH_4 + H_2O \quad (8)$$

$$CH_3 - OH + 2H^{\bullet} \rightarrow (CH_2 = O + 2H_2) \rightarrow CO + 3H_2 \quad (9)$$

Methanol reacting according to reaction 9 does not contribute to the detector response. An ECN for methanol of 0.75 therefore means that k_8/k_9 is about 3. With multicarbon alcohols, thermally induced elimination of water followed by alkene reduction

Table 3
Contributions to effective carbon number, from Ref. [7]

Atom	Type	Effective carbon number contribution
C	Aliphatic	1.0
C	Aromatic	1.0
C	Olefinic	0.95
C	Acetylenic	1.3
C	Nitrile	0.3
O	Ether	−1.0
O	Primary alcohol	−0.6
O	Secondary alcohol	−0.75
O	Tertiary alcohol, esters	−0.25
Cl	Two or more on aliphatic C	−0.12 each
Cl	On olefinic C	+0.05
N	In amines	Similar to O in alcohols

gives no loss in ECN, but the ECN will diminish to the same extent to which CO production takes place by C–C fractionation and hydrogen abstraction at the α-position. That the ECN for ethanol is 1.70 shows that elimination is fairly important, since only 30% of the oxygen-carrying carbons are converted to CO.

For amines a very analogous series of reactions take place:

$$CH_3\text{-}NH_2 + 2H^{\bullet} \rightarrow CH_4 + NH_3 \quad (10)$$

$$CH_3\text{-}NH_2 + 2H^{\bullet} \rightarrow (CH_2 = NH + 2H_2) \rightarrow HCN + 3H_2 \quad (11)$$

For multicarbon amines thermal elimination, C–C bond splitting, and HCN formation via reaction 11 compete. Unlike CO, HCN has a small positive ECN and the FID response from an amine results from the formation of both formylium ions from methane and nitrosonium ions from HCN molecules [7].

Compounds containing a single halogen atom may undergo elimination or hydrogenation in the flame. In both cases the hydrocarbons are transformed into methane molecules with no loss in ECN. RMRs for aromatic halogen compounds and for compounds with several halogens at the same carbon are more complicated. Methyl chloride, dichloromethane, chloroform and tetrachloromethane give less and less response with RMR decreasing from almost 1.0 to 0.5 [7]. Only methane and hydrogen chloride are found in the flame. The detector responses obtained from fully halogenated compounds is not fully understood.

It is interesting that even though the mechanism of FID was not understood it has developed toward greater and greater perfection. But for the daily user of the method it may be an inspiration to know that the FID system more than anything else is a methane detector.

References

[1] I.G. William, R.A. Dewar, in: D.H. Desty (Ed.), Proc. 2nd Symp. Gas Chromatogr. Discussion Group, Butterworth, London, 1958.
[2] O. Stern as quoted by B. Lewis and G. von Elbe, in: Combustion, Flame and Expl. of Gases, Academic Press, New York, 1951.
[3] J. Deckers, A. van Tiggelen, Combust. Flame 1 (1957) 281.
[4] P.F. Knewstubb, T.M. Sugden, Proc. Royal Soc. London Ser. A 225 (1960) 520.
[5] H.F. Calcote, 8th Int. Symp. Combust. (1962) 184.
[6] D.K. Bohme, in: P.J. Ausloss (Ed.), Kinetics of Ion–Molecule Reactions, Plenum Press, New York, 1979.
[7] J.C. Sternberg, W.S. Gallaway, D.T.L. Jones, in: N. Brenner, J.E. Callin, M.D. Weiss (Eds.), Gas Chromatography, Academic Press, New York, 1962, p. 261.
[8] F.O. Rice, K.F. Herzfeld, J. Am. Chem. Soc. 56 (1934) 284.
[9] A.T. Blades, J. Chromatogr. Sci. 11 (1973) 251–255.
[10] A.T. Blades, Can. J. Chem. 54 (1976) 2919–2924.
[11] A.J.C. Nicholson, J. Chem. Soc., Faraday Trans. I 78 (1982) 2183–2194.
[12] T. Holm, J.Ø. Madsen, Anal. Chem. 68 (1996) 3607–3611.
[13] T. Holm, J. Chromatogr. A 782 (1997) 81.
[14] J.T. Scanion, D.E. Willis, J. Chromatogr. Sci. 23 (1995) 333–340.
[15] A.D. Jorgensen, K.C. Picel, V.C. Stamoudis, Anal. Chem. 62 (1990) 683–689.