4. Analysis of heat conduction

John Richard Thome

11 mars 2008

4.1 The well-posed problem

Before we go further with heat conduction problems, we must describe how to state such problems so they can really be solved. A well-posed heat conduction problem is one in which all the relevant information needed to obtain a unique solution is stated.

- Find

$$T = T(x, y, z, t)$$

  which is a solution of thermal equation

With

- One initial condition at t=0
- Two boundary conditions for each coordinate (three common types)

4.1 The well-posed problem

Common boundary conditions :

- Dirichlet
- Neumann
- Third kind

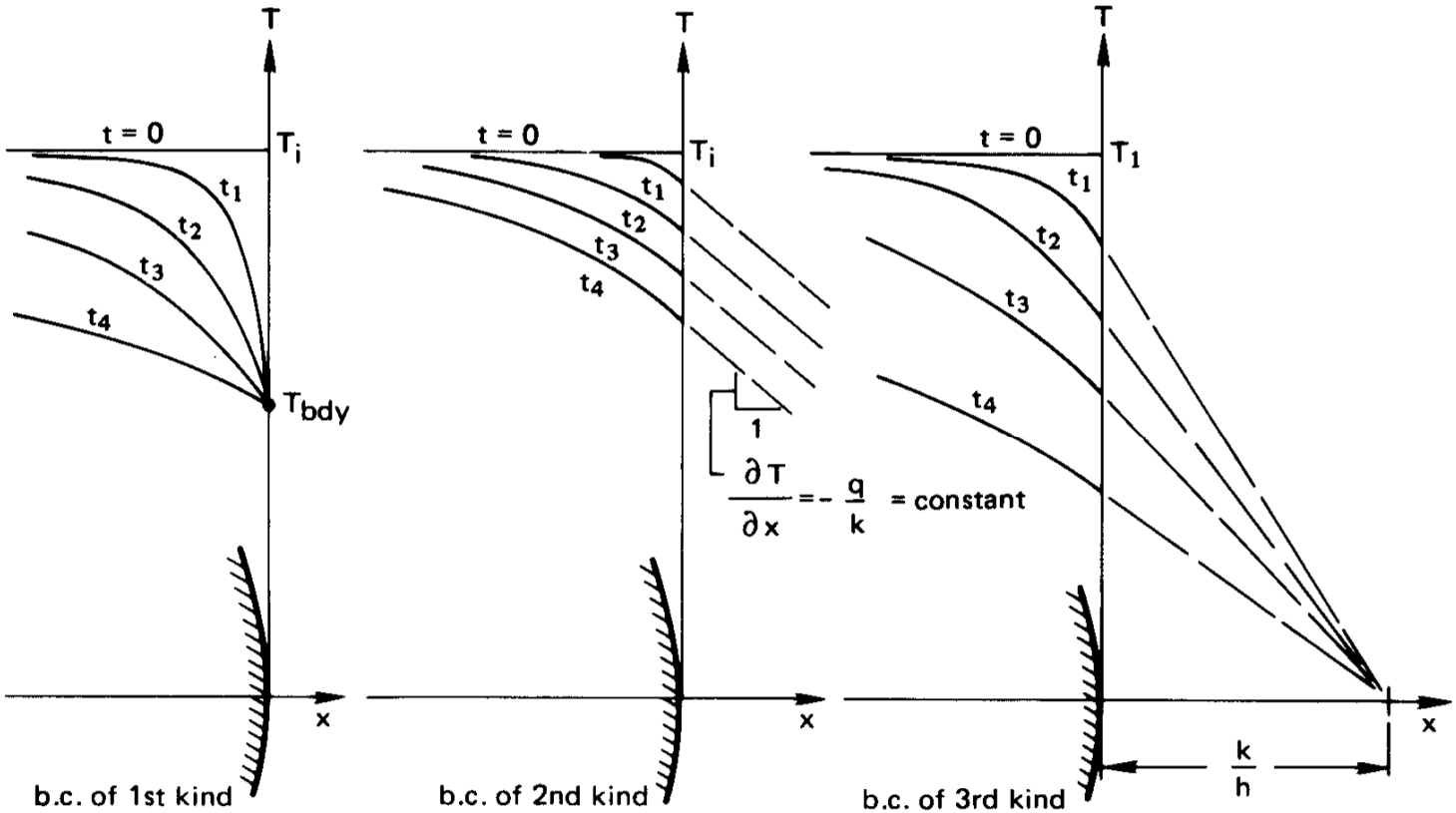

4.2 The general solution

For **one-dimensional steady heat conduction**, find the general solutions of linear ordinary differential equations, by asking for a table of all general solutions of one-dimensional heat conduction problems.

Simple equation can be integrate twice to get solution like :

$$T = C_1 y + C_2$$

4.2 The general solution

For multidimensional problems : The general equation for $T\left(\overrightarrow{r}\right)$ with

- steady conduction.
- constant thermal conductivity.
- without internal heat generation.

Is called *Laplace's equation* :

$$\nabla^2 T = 0$$

It looks easier to solve than it is, since the Laplacian is a sum of several second partial derivatives. Faced with a steady multidimensional problem, four routes are open to us

- Find out whether or not the analytical solution is already available in a heat conduction text or in other published literature.
- Solve the problem analytically.
- Obtain the solution graphically.
- Solve the problem numerically.

4.2 Separation of variables

Consider two-dimensional steady heat conduction without heat sources :

$$\frac{\partial^2 T}{\partial x^2} + \frac{\partial^2 T}{\partial y^2} = 0$$

For 2nd order equation in 2-dimensions we need two B.C. for each coordinate

$$T(0, y) = 0 \quad \textit{and} \quad T(x, 0) = 0$$
$$T(L, y) = 0 \quad \textit{and} \quad T(x, H) = 1$$

Three of the four boundary conditions are homogeneous and the value of T is from 0 to 1. Set $T = XY$ (separating variables) and

$$\frac{1}{X}\frac{d^2 X}{dx^2} = -\frac{1}{Y}\frac{d^2 Y}{dy^2}$$

4.2 Separation of variables

Setting each side equal to the separating constant, we get, where λ can be an imaginary number

$$\frac{d^2X}{dx^2} + \lambda^2 X = 0 \quad \textit{and} \quad \frac{d^2Y}{dy^2} - \lambda^2 X = 0$$

Then, for $\lambda \neq 0$

$$X = A \sin \lambda x + B \cos \lambda x$$

$$Y = Ce^{\lambda y} + De^{-\lambda y}$$

And hence the general solution is

$$T = (E \sin \lambda x + F \cos \lambda x)\left(e^{-\lambda y} + Ge^{\lambda y}\right)$$

Applying the boundary conditions, we get the final solution

$$T(x, y) = \frac{2}{\pi} \sum_{n=1}^{\infty} \frac{(-1)^{n+1} + 1}{n} \sin \frac{n\pi x}{L} \frac{\sinh(n\pi y/L)}{\sinh(n\pi H/L)}$$

4.3 Dimensional analysis

Method of functional replacement

Example 2.6

Major independent variable : r
System parameters : r_i, r_o, $\overline{h}$, k, and $(T_\infty - T_i)$

Reorganizing the solution into dimensionless groups

$$\underbrace{\frac{T - T_i}{T_\infty - T_i}}_{\text{dependent variable}} = f\left[\underbrace{r/r_i}_{\textit{indep.var.}}, \quad \underbrace{r_o/r_i, \quad \mathrm{Bi}}_{\text{two system parameters}}\right] \qquad (2.24a)$$

Reduction of total number of variables to only four.

4.3 Dimensional analysis

Advantages

- For one thing, it permitted us to plot all conceivable solutions for a particular shape of cylinder
- Study the simultaneous roles of $\overline{h}$, k and r_o in defining the character of the solution
- Consider, simultaneously, the behavior of all similar systems of heat conduction
- often greatly simplify the process of solving

The Buckingham pi-theorem

Main conceptual hurdle : Suppose that y depends on r, x, z

$$y = y(r, x, z, ...)$$

Take any one variable and arbitrarily multiply it by any other variables in the equation, without altering the truth of the functional equation

$$\frac{y}{x} = \frac{y}{x}(x^2 r, x, xz)$$

for example

$$y = y(r, x, z) = r(\sin x)e^{-z}$$

Then

$$\frac{y}{x} = \frac{x^2 r}{x^3}(\sin x)exp\left[-\frac{xz}{x}\right]$$

The functional equation is still valid.

4.3 Dimensional analysis

Example 4.2

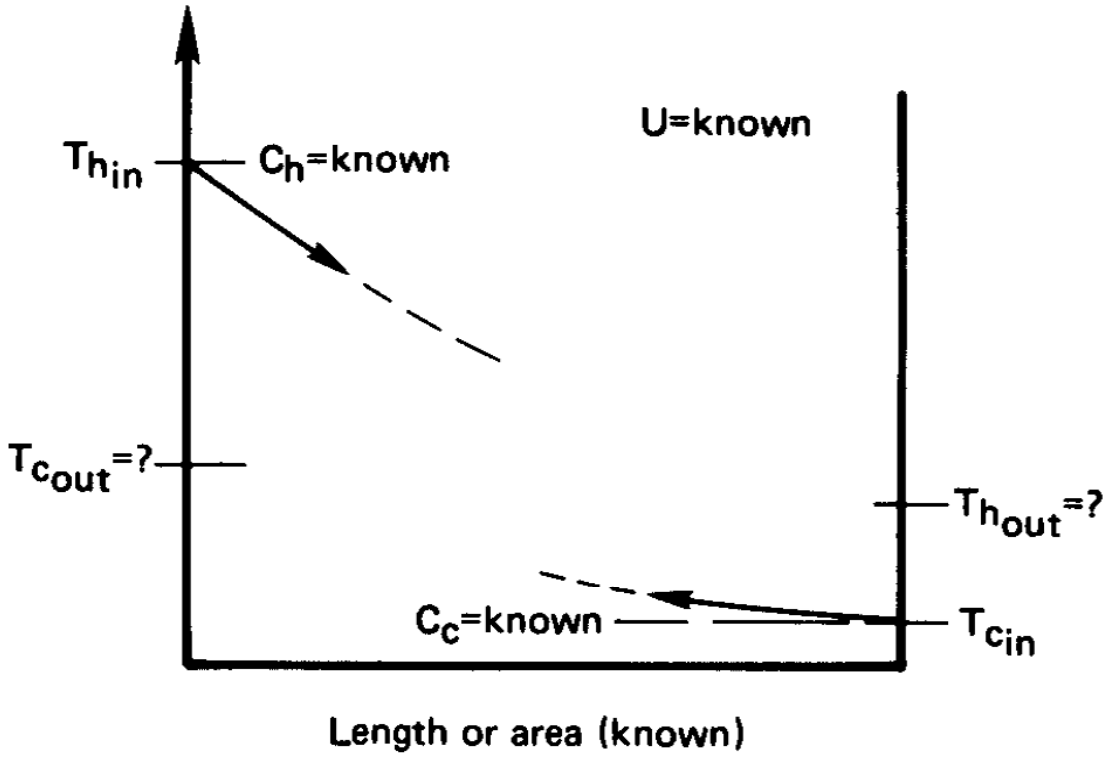

dependent variable is either of the exit temperatures.

4.3 Dimensional analysis

$$\underbrace{T_{C,\,out} - T_{C,\,in}}_{K} = f\left[\underbrace{C_{\max}}_{W/K}, \underbrace{C_{\min}}_{W/K}, \underbrace{(T_{h,\,in} - T_{c,\,in})}_{K}, \underbrace{U}_{W/m^2K}, \underbrace{A}_{m^2}\right] \tag{4.14}$$

- One at a time, select a variable that has one of the dimensions
- Divide or multiply it by the other variables to eliminate the dimension from them

First with the variable $(T_{h,\,in} - T_{C,\,in})$

$$\underbrace{\frac{T_{C,\,out} - T_{C,\,in}}{T_{h,\,in} - T_{C,\,in}}}_{\text{dimensionless}} =$$

$$f\left[\underbrace{C_{\max}(T_{h,\,in} - T_{C,\,in})}_{W}, \underbrace{C_{\min}(T_{h,\,in} - T_{C,\,in})}_{W}, \underbrace{(T_{h,\,in} - T_{c,\,in})}_{K}, \underbrace{U(T_{h,\,in} - T_{C,\,in})}_{W/m^2}, \underbrace{A}_{m^2}\right]$$

4.3 Dimensional analysis

It is impossible to achieve dimensional homogeneity without another term in K to balance it. So we must remove it

$$\underbrace{\frac{T_{C,\,out} - T_{C,\,in}}{T_{h,\,in} - T_{C,\,in}}}_{\text{dimensionless}} =$$

$$f\left[\underbrace{C_{\max}(T_{h,\,in} - T_{C,\,in})}_{W}, \underbrace{C_{\min}(T_{h,\,in} - T_{C,\,in})}_{W}, \underbrace{U(T_{h,\,in} - T_{C,\,in})}_{W/m^2}, \underbrace{A}_{m^2}\right]$$

Next, multiply $U(T_{h,\,in} - T_{c,\,in})$ by A

Then A can no longer stay in the equation

$$\underbrace{\frac{T_{C,\,out} - T_{C,\,in}}{T_{h,\,in} - T_{C,\,in}}}_{\text{dimensionless}} = f\left[\underbrace{C_{\max}(T_{h,\,in} - T_{C,\,in})}_{W}, \underbrace{C_{\min}(T_{h,\,in} - T_{C,\,in})}_{W}, \underbrace{UA(T_{h,\,in} - T_{C,\,in})}_{W}\right]$$

4.3 Dimensional analysis

Divide the first and third terms by the second

$$\frac{T_{C,\,out} - T_{C,\,in}}{T_{h,\,in} - T_{C,\,in}} = f\left(\frac{C_{\max}}{C_{\min}}, \frac{UA}{C_{\min}}\right) \qquad (4.15)$$

Buckingham pi-theorem : A physical relationship among n variables, which can be expressed in a *minimum* of m dimensions, can be rearranged into a relationship among $(n - m)$ *independent* dimensionless groups of the original variables.

Dimensionless functional equation

$$\Pi_1 = f(\Pi_2, \Pi_3, ..., \Pi_{n-m}) \qquad (4.16)$$

Example 4.5

What is the velocity of efflux of liquid from the tank shown in Fig. 4.4 ?

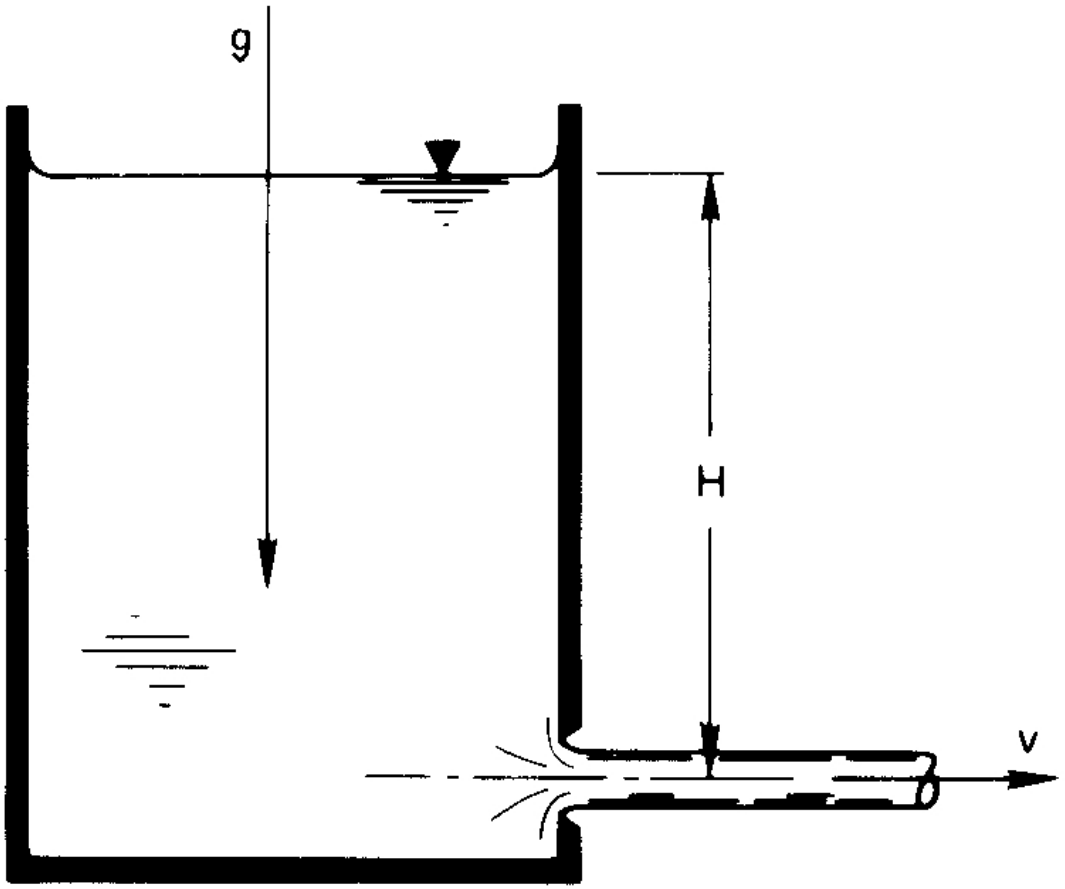

Figure 4.4 Efflux of liquid from a tank.

Solution

$$\underbrace{V}_{m/s} = f\left[\underbrace{H}_{m}, \underbrace{g}_{m/s^2}\right]$$

So there are three variables in two dimensions, and we look for 3-2 = 1 pi-groups.

$$\Pi_1 = \frac{V}{\sqrt{gH}} = \text{constant}$$

or

$$V = \text{constant} \cdot \sqrt{gH}$$

4.4 An illustration of the use of dimensional analysis in a complex steady conduction problem

Heat conduction problems with convective boundary conditions can rapidly grow difficult. It is wise to take great care that dimensions are consistent at each stage of the solution. The best way to do this is to nondimensionalize the heat conduction equation before we apply the b.c.'s.

Example 4.7

A slab shown in Figure 4.5 has different temperatures and different heat transfer coefficients on either side and the heat is generated within it. Calculate the temperature distribution in the slab.

4.4 An illustration of the use of dimensional analysis in a complex steady conduction problem

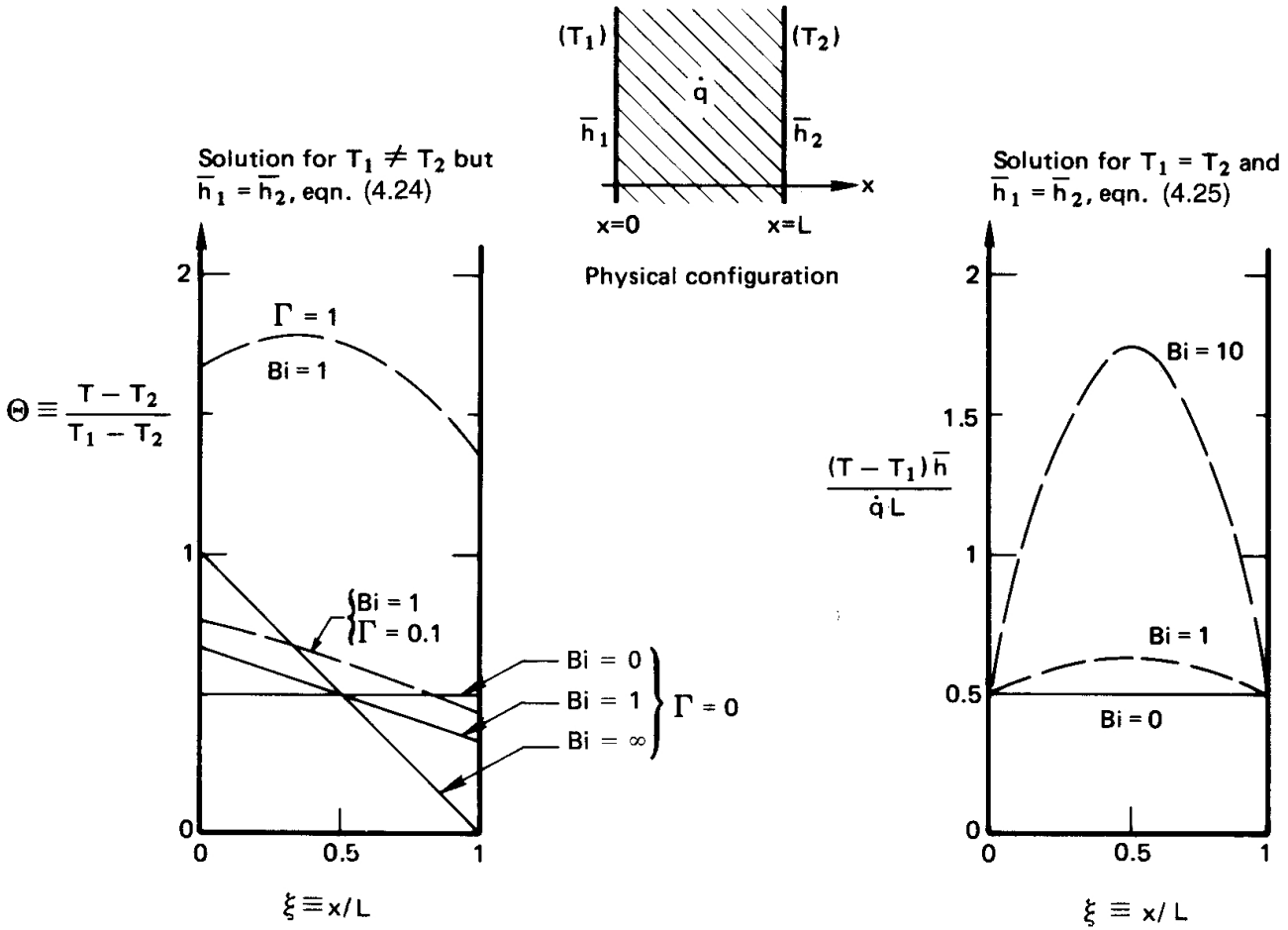

Figure 4.5 Heat conduction through a heat-generating slab with asymmetric boundary conditions.

4.4 An illustration of the use of dimensional analysis in a complex steady conduction problem

Solution

$$\frac{d^2T}{dx^2} = -\frac{\dot{q}}{k}$$

general solution

$$T = -\frac{\dot{q}x^2}{2k} + C_1 x + C_2 \qquad (4.19)$$

with b.c.'s

$$\overline{h}_1(T_1 - T)_{x=0} = -k\frac{dT}{dx}_{x=0}, \qquad \overline{h}_2(T - T_2)_{x=L} = -k\frac{dT}{dx}_{x=L} \qquad (4.20)$$

8 variables : $(T - T_2)$, $(T_1 - T_2)$, x, L, k, $\overline{h}_1$, $\overline{h}_2$, and $\dot{q}$
3 dimensions : K, W and m
5 pi-groups

4.4 An illustration of the use of dimensional analysis in a complex steady conduction problem

$$\Pi_1 \equiv \Theta = \frac{T - T_2}{T_1 - T_2}, \quad \Pi_2 \equiv \xi = \frac{x}{L}, \quad \Pi_3 \equiv \mathrm{Bi}_1 = \frac{\overline{h}_1 L}{k}, \quad \Pi_4 \equiv \mathrm{Bi}_2 = \frac{\overline{h}_2 L}{k}$$

$$\text{and} \quad \Pi_5 \equiv \Gamma = \frac{\dot{q} L^2}{2k(T_1 - T_2)}$$

Equation (4.19) becomes

$$\Theta = -\Gamma \xi^2 + C_3 \xi + C_4 \qquad (4.21)$$

and b.c.'s become

$$\mathrm{Bi}_1(1 - \Theta_{\xi=0}) = -\Theta'_{\xi=0}, \quad \mathrm{Bi}_2(1 - \Theta_{\xi=1}) = -\Theta'_{\xi=1} \qquad (4.22)$$

Primes denote differentiation with respect to ξ. Substituting equation (4.21) in equation (4.22)

$$\mathrm{Bi}_1(1 - C_4) = -C_3, \quad \mathrm{Bi}_2(-\Gamma + C_3 + C_4) = -2\Gamma - C_3 \qquad (4.23)$$

4.4 An illustration of the use of dimensional analysis in a complex steady conduction problem

Substituting the first of equations (4.23) in the second

$$C_4 = 1 + \frac{-\mathrm{Bi}_1 + 2(\mathrm{Bi}_1/\mathrm{Bi}_2)\Gamma + \mathrm{Bi}_1\Gamma}{\mathrm{Bi}_1 + \mathrm{Bi}_1^2/\mathrm{Bi}_2 + \mathrm{Bi}_1^2}$$

$$C_3 = \mathrm{Bi}_1(C_4 - 1)$$

Equation (4.21) becomes

$$\Theta = 1 + \Gamma\left[\frac{2(\mathrm{Bi}_1/\mathrm{Bi}_2) + \mathrm{Bi}_1}{1 + \mathrm{Bi}_1/\mathrm{Bi}_2 + \mathrm{Bi}_1}\xi - \xi^2 + \frac{2(\mathrm{Bi}_1/\mathrm{Bi}_2) + \mathrm{Bi}_1}{\mathrm{Bi}_1 + \mathrm{Bi}_1^2/\mathrm{Bi}_2 + \mathrm{Bi}_1^2}\right]$$

$$-\frac{\mathrm{Bi}_1}{1 + \mathrm{Bi}_1/\mathrm{Bi}_2 + \mathrm{Bi}_1}\xi - \frac{\mathrm{Bi}_1}{\mathrm{Bi}_1 + \mathrm{Bi}_1^2/\mathrm{Bi}_2 + \mathrm{Bi}_1^2} \qquad (4.24)$$

This is a complicated result and one that would have required enormous patience and accuracy to obtain without first simplifying the problem statement as we did.

4.4 An illustration of the use of dimensional analysis in a complex steady conduction problem

If the heat transfer coefficients were the same on either side of the wall, then $Bi_1 = Bi_2 = Bi$, and equation (4.24) becomes

$$\Theta = 1 + \Gamma(\xi - \xi^2 + 1/\mathrm{Bi}) - \frac{\xi + 1/\mathrm{Bi}}{1 + 2/\mathrm{Bi}} \qquad (4.25)$$

Equation (4.25) is plotted on the left-hand side of Figure 4.5.

- When $\Gamma << 0.1$, heat generation can be ignored.
- When $\Gamma >> 1$, $\Theta \rightarrow \Gamma/\mathrm{Bi} + \Gamma(\xi - \xi^2)$, simple parabolic temperature distribution.
- When Γ and $1/\mathrm{Bi}$ become large, $\Theta \rightarrow \Gamma/\mathrm{Bi}$, when internal resistance is low and the heat generation is great, the slab temperature is constant and quite high.

4.4 An illustration of the use of dimensional analysis in a complex steady conduction problem

If T_2 were equal to T_1, we should redo the dimensional analysis of the problem.

Dimensional functional equation $(T - T_1)$ is function of x, L, k, $\overline{h}$, and $\dot{q}$.

6 variables
3 dimensions
3 pi-groups

$$\frac{T - T_1}{\dot{q}L/h} = f(\xi, \mathrm{Bi})$$

Multiplying both sides of equation (4.25) by $\bar{h}(T_1 - T_2)/\dot{q}\delta$.

$$\frac{\overline{h}(T - T_1)}{\dot{q}L} = \frac{1}{2}\mathrm{Bi}(\xi - \xi^2) + \frac{1}{2} \qquad (4.26)$$

4.4 An illustration of the use of dimensional analysis in a complex steady conduction problem

Equation (4.26) is plotted on the right-hand side of Figure 4.5.

- Heat generation is the only"force".
- When Bi $<<$ 1, the slab temperature approaches a uniform value equal to $T_1 + \dot{q}L/2h$.
- When Bi $>$ 100, the temperature distribution is a very large parabola with $\frac{1}{2}$ added to it.

4.5 Fin design

Extended surfaces : The convective removal of heat from a surface can be substantially improved if we put extensions on that surface to increase its area. These extensions can take a variety of forms. Next figures, for example, show many different ways in which the surface of commercial heat exchanger tubing can be extended with protrusions of a kind we call **fins**. These examples involve some rather complicated fins. But the analysis of a straight fin protruding from a wall displays the essential features of all fin behavior.

4.5 Fin design

Eight examples of externally finned tubing :

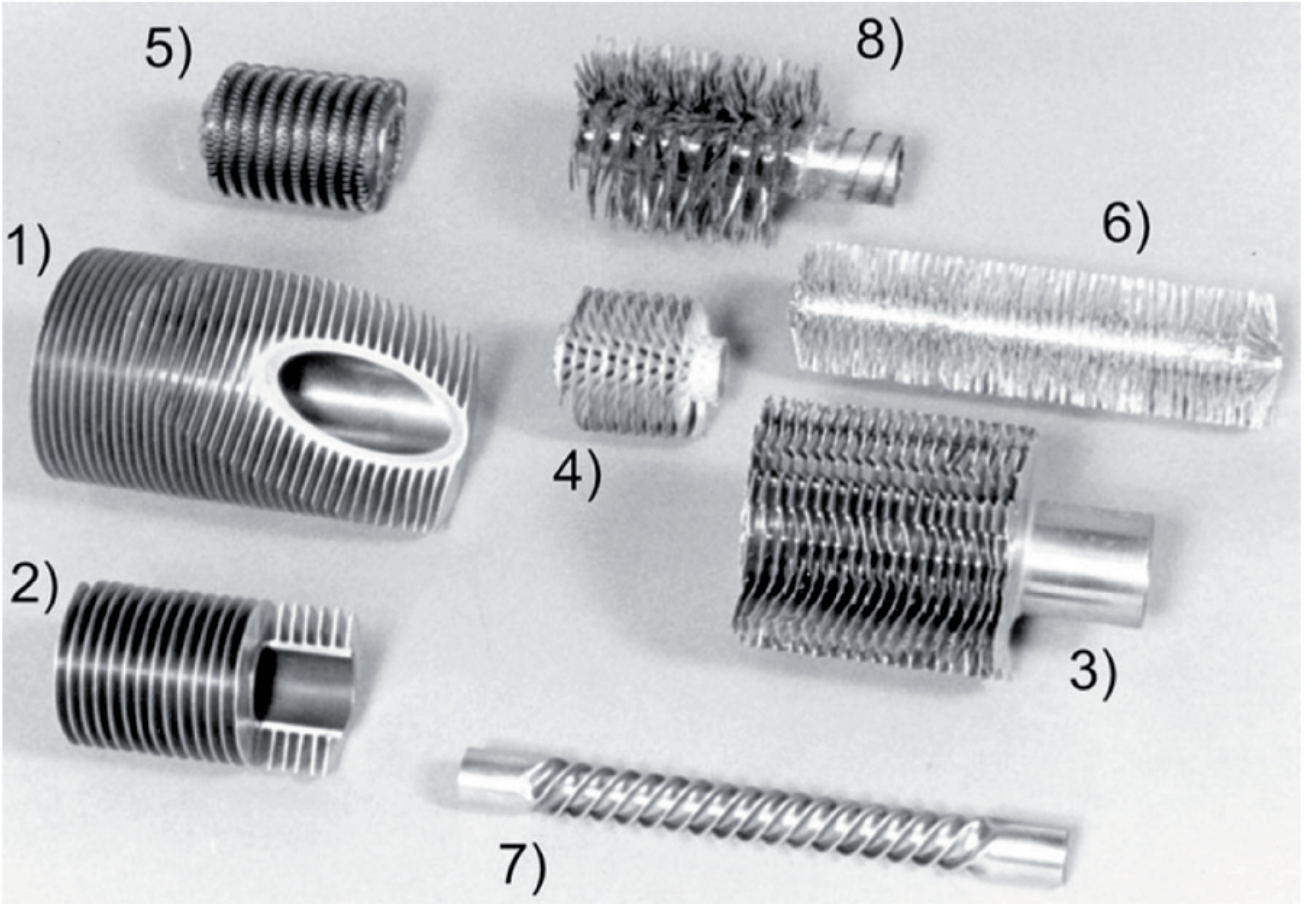

4.5 Fin design

An array of commercial internally finned tubing :

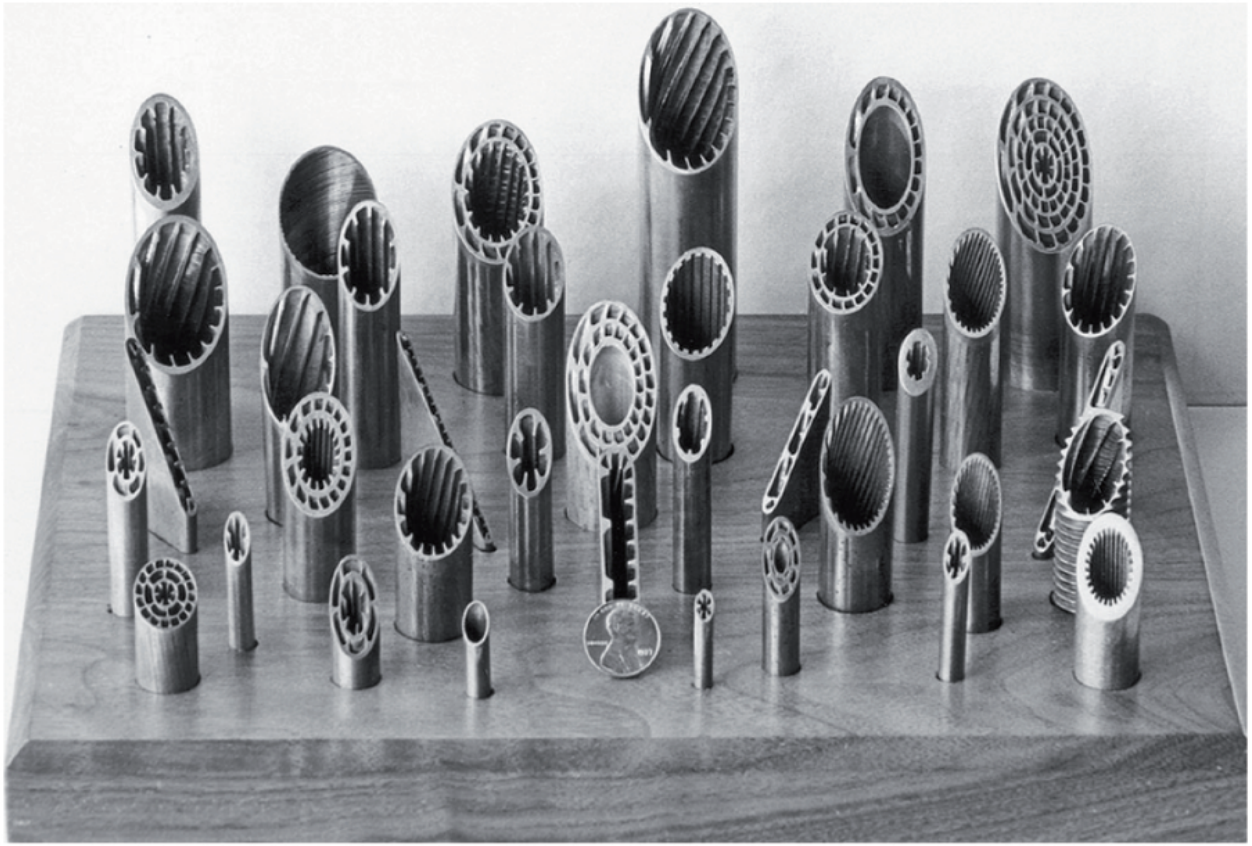

4.5 Fin design

A general analysis

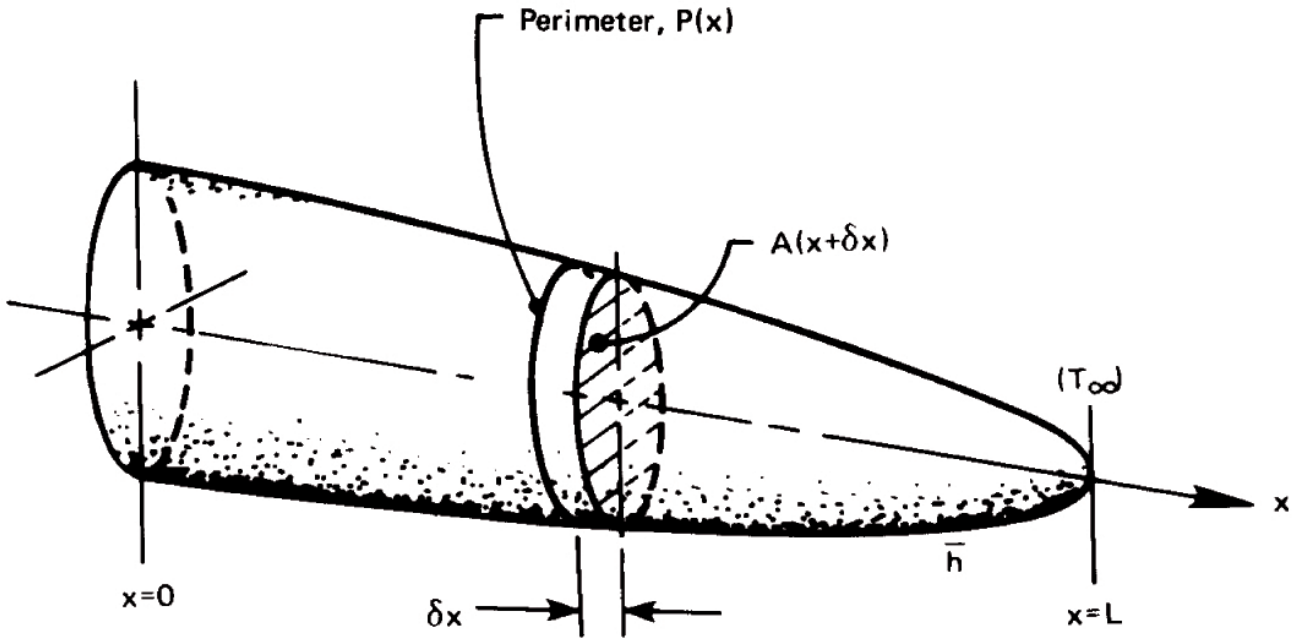

To determine the heat transfer from a fin to a fluid (or from a fluid to a fin), we must first determine the temperature profile formed in the fin.

4.5 Fin design

The analysis is simplified if we make several assumptions :

- We assume one-dimensional heat conduction along the fin (in the x-axis) even though it is really 2-dimensional in the fin.
- We assume a steady-state condition. Hence, all the heat conducted into the base of the fin is conducted to its surface and convected into the fluid.
- We also assume that the thermal conductivity of the fin is constant, that thermal radiation is negligible, that there is no internal heat generation and that the convective heat transfer coefficient, h, is uniform.

4.5 Fin design : variable cross section

Considering the differential element and applying the conservation of energy (First Law), we get

$$Q_{net} = Q_{cond,x} - Q_{cond,x+\delta x} - Q_{conv,\delta x}$$

From Fourier's law of conduction :

$$Q_{cond} = q_{cond} A_x = -kA_x \frac{dT}{dx}$$

The convective heat flow from the surface area of the fin can be written as :

$$Q_{conv} = \overline{h} P \delta x \left(T - T_\infty \right)$$

4.5 Fin design : variable cross section

Hence, since steady-state condition, from equation, we get

$$\left[kA_{x+\delta x}\left.\frac{dT}{dx}\right|_{x+\delta x}\right] - \left[kA_x\left.\frac{dT}{dx}\right|_{x}\right] - \overline{h}P\delta x\left(T - T_\infty\right) = 0$$

$$\frac{d}{dx}kA_x\frac{dT}{dx}\delta x - \overline{h}P\delta x\left(T - T_\infty\right) = 0$$

Therefore,

$$\frac{d}{dx}\left[A_x\frac{d\left(T - T_\infty\right)}{dx}\right] - \frac{\overline{h}P}{k}\left(T - T_\infty\right) = 0 \qquad (4.60)$$

4.5 Fin design : uniform cross section

Fins of uniform cross-sectional area

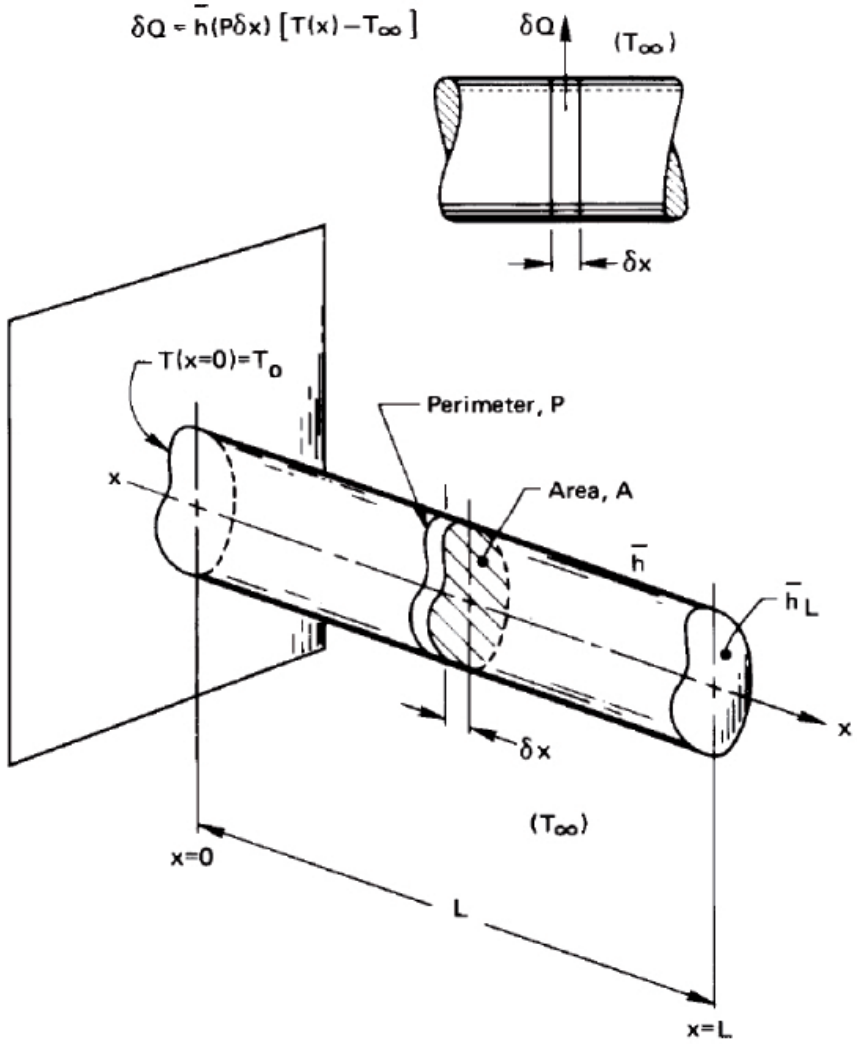

4.5 Fin design

An energy balance on the thin slice of the fin reduces equation to

$$\frac{d^2\left(T - T_\infty\right)}{dx^2} = \frac{\overline{h}P}{kA}\left(T - T_\infty\right)$$

We can simplify this equation to an equivalent form by setting

$$\Theta = \frac{T - T_\infty}{T_0 - T_\infty}$$

where $d\Theta/dx = dT/dx$ since T_∞=constant.

4.5 Fin design

Thus, equation becomes

$$\frac{d^2\Theta}{d\xi^2} = (mL)^2\,\Theta \qquad (4.34)$$

where we call $\sqrt{\overline{h}PL^2/kA} = mL$ and $x/L = \xi$ because that terminology is common in the literature on fins. This equation is a linear, homogeneous, second-order differential equation with constant coefficients and its general solution is

$$\Theta = C_1 e^{mL\xi} + C_2 e^{-mL\xi} \qquad (4.35)$$

The value of C_1 and C_2 depend on the boundary conditions selected.

4.5 Fin design : Temperature distribution with the tip insulated

Assume that the fin tip is perfectly insulated such that there is no heat loss from the tip. The boundary conditions can be written as

$$\begin{aligned} \Theta_{\xi=0} &= 1 \\ \left.\frac{d\Theta}{d\xi}\right|_{\xi=1} &= 0 \end{aligned}$$

Substituting into both B.C., we get $C_1 + C_2 = 1$ and $C_1 e^{mL} - C_2 e^{-mL} = 0$. The solution is then

$$C_1 = \frac{e^{-mL}}{2\cosh mL} \qquad C_2 = 1 - \frac{e^{-mL}}{2\cosh mL}$$

Therefore

$$\Theta = \frac{e^{-mL(1-\xi)} + (2\cosh mL)\, e^{-mL\xi} - e^{-mL(1+\xi)}}{2\cosh mL}$$

which simplifies to

$$\Theta = \frac{\cosh mL\,(1-\xi)}{\cosh mL} \qquad (4.41)$$

4.5 Fin design : Temperature distribution with the tip insulated

One of the most important design variables for a fin is the rate at which it removes (or delivers) heat the wall. To calculate this, we write Fourier's law for the heat flow into the base of the fin :

$$Q = -kA \left. \frac{d\left(T - T_\infty\right)}{dx} \right|_{x=0}$$

We obtain, after substituting

$$\frac{QL}{kA\left(T_0 - T_\infty\right)} = mL \frac{\sinh mL}{\cosh mL} = mL \tanh mL$$

which can be written

$$\frac{Q}{\sqrt{kA\bar{h}P}\left(T_0 - T_\infty\right)} = \tanh mL \qquad (4.44)$$

4.5 Fin design : Temperature distribution with the tip insulated

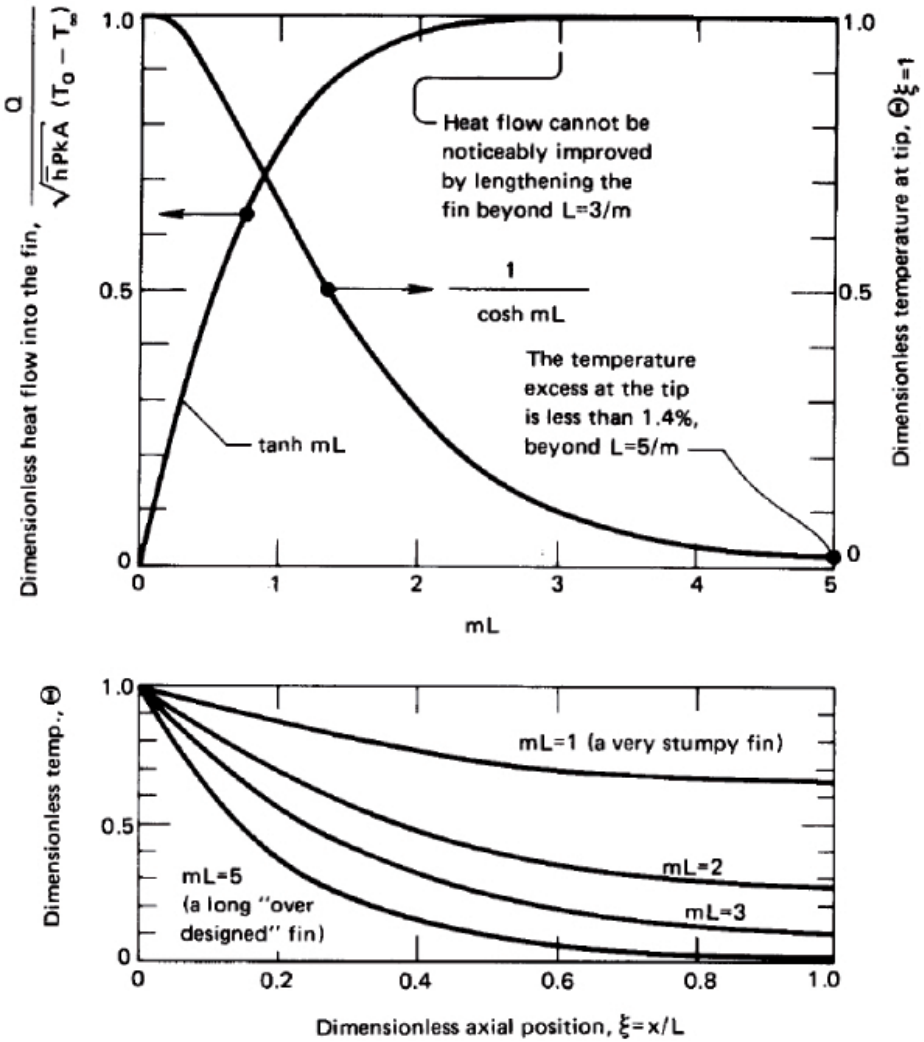

4.5 Fin design : Exact temperature distribution in a fin with an uninsulated tip

The approximation of an insulated tip may be avoided using the following B.C. (dimensionless form)

$$\begin{aligned} \Theta_{\xi=0} &= 1 \\ -\left.\frac{d\Theta}{d\xi}\right|_{\xi=1} &= Bi_{ax}\Theta_{\xi=1} \end{aligned}$$

I.e., heat conducted to tip must be equal to heat leaving by convection from the tip. Substituting into both B.C., we get

$$C_1 + C_2 = 1$$

$$-mL\left(C_1 e^{mL} - C_2 e^{-mL}\right) = Bi_{ax}\left(C_1 e^{mL} + C_2 e^{-mL}\right)$$

4.5 Fin design : Exact temperature distribution in a fin with an uninsulated tip

It requires some manipulation to solve this equation for C_1 and C_2 and to substitute the results. The result is

$$\Theta = \frac{\cosh mL\,(1-\xi) + (Bi_{ax}/mL)\sinh mL\,(1-\xi)}{\cosh mL + (Bi_{ax}/mL)\sinh mL} \qquad (4.48)$$

The corresponding heat flux equation is

$$\frac{Q}{\sqrt{(kA)\left(\overline{h}P\right)}\,(T_0 - T_\infty)} = \frac{(Bi_{ax}/mL) + \tanh mL}{1 + (Bi_{ax}/mL)\tanh mL} \qquad (4.49)$$

4.5 Fin design : Very long fin

If a fin is so long that $mL \gg 1$, its tip temperature will approach that of the fluid temperature T_∞, then

$$\lim_{mL\to\infty} \Theta = \lim_{mL\to\infty} \frac{e^{mL(1-\xi)} + e^{-mL(1-\xi)}}{e^{mL} + e^{-mL}} = \frac{e^{mL(1-\xi)}}{e^{mL}}$$

or

$$\lim_{mL\to large} \Theta = e^{-mL\xi} \qquad (4.50)$$

Substituting this result, we obtain

$$Q = \sqrt{\left(kA\bar{h}P\right)}\left(T_0 - T_\infty\right) \qquad (4.51)$$

In practice, a fin may be regarded as *infinitely long* in computing its temperature if $mL \geq 5$.

4.5 Fin design : Physical significance of mL

We should therefore say a brief word about the group mL. Notice that

$$(mL)^2 = \frac{L/kA}{1/\overline{h}(PL)} = \frac{internal\ \ resistance\ \ in\ x-direction}{gross\ \ external\ \ resistance}$$

Thus $(mL)^2$ is a hybrid Biot number. When it is big, $\Theta_{\xi=1} \longrightarrow 0$ and we can neglect tip convection. When it is small, the temperature drop along the axis of the fin becomes small.

4.5 Fin design : Problem of specifying the root temperature

Thus far, we have assumed the root temperature of a fin to be given information. There really are many circumstances in which it might be known ; however, if a fin protudes from a wall of the same material, it is clear that for heat to flow, there must be a temperature gradient in the neighborhood of the root. Consider the situation in which the surface of a wall is kept at a temperature T_S. If $T_\infty < T_S$, the wall temperature will be depressed. The fin's performance should then be predict using the lowered root temperature, T_{root}. Sparrow and Hennecke's analysis give

$$1 - \frac{Q_{actual}}{Q_{no\ \ temp.\ \ depression}} = \frac{T_S - T_{root}}{T_S - T_\infty}$$

4.5 Fin design : Problem of specifying the root temperature

The heat flow near the root of the circular cylindrical fin :

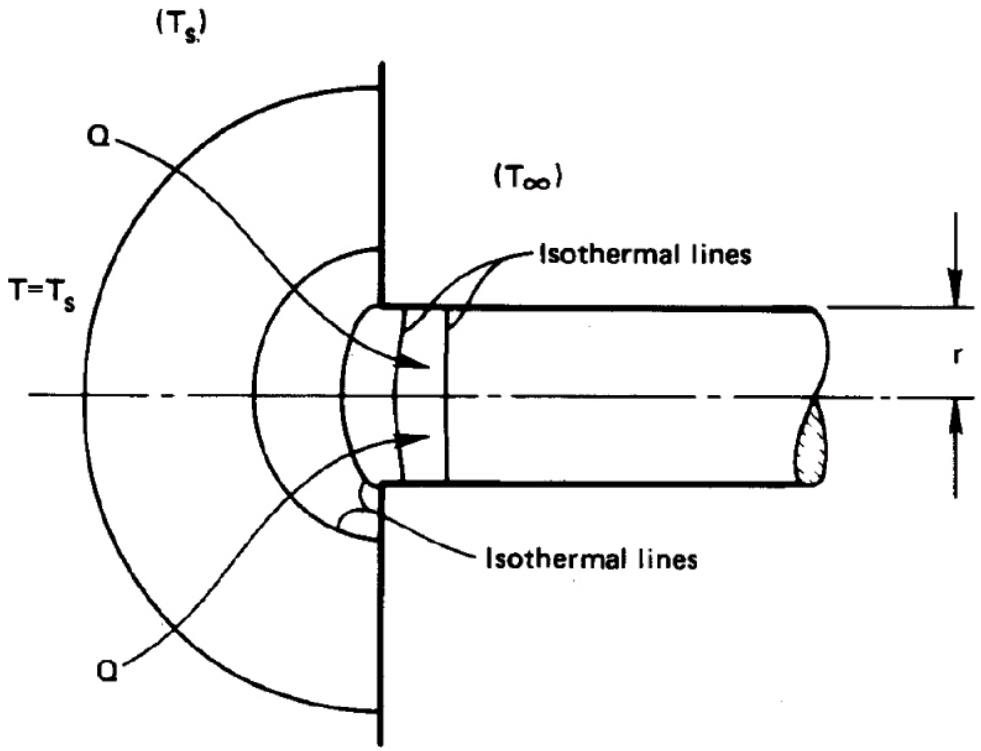

4.5 Fin design

Two basic measures of fin performance are particularly useful in a fin design. The first is called the *efficiency* :

$$\eta_f \equiv \frac{\textit{actual heat transferred by a fin}}{\textit{heat that would be transferred if the entire fin were at } T = T_0}$$

To see how this works, we evaluated η_f for a one-dimensional fin with an insulated tip :

$$\eta_f = \frac{\sqrt{(\overline{h}P)(kA)}\,(T_0 - T_\infty)\tanh mL}{\overline{h}\,(PL)\,(T_0 - T_\infty)} = \frac{\tanh mL}{mL} \qquad (4.54)$$

4.5 Fin design

A second measure of fin performance is called the *effectiveness* :

$$\varepsilon_f \equiv \frac{heat\ flux\ from\ the\ wall\ with\ the\ fin}{heat\ flux\ from\ the\ wall\ without\ the\ fin}$$

This can easily be computed from the efficiency

$$\varepsilon_f = \eta_f \frac{surface\ area\ of\ the\ fin}{cross-sectional\ area\ of\ the\ fin} \qquad (4.56)$$

4.5 Fin design

Normally, we want the effectiveness to be as high as possible, but this can always be done by extending the length of the fin, and that rapidly becomes a losing proposition. The design of a fin thus becomes an open-ended matter of optimizing, subject to many factors :

- The weight of material added by the fin.
- The possible dependence of $\overline{h}$ on $(T - T_\infty)$.
- The influence of the fin on the heat transfer coefficient, $\overline{h}$, as the fluid moves around it.
- The geometric configuration of the channel that the fin lies in.
- The pressure drop introduced by the fins.
- ...

4.5 Fin design

When fins occur in combination with other thermal elements, it can simplify calculations to treat them as a thermal resistance between the root and the surrounding fluid.

$$Q = \frac{T_0 - T_\infty}{\left(\sqrt{kA\bar{h}P}\tanh mL\right)^{-1}} \equiv \frac{T_0 - T_\infty}{R_{t,fin}}$$

where, for a straight fin

$$R_{t,fin} = \frac{1}{\sqrt{kA\bar{h}P}\tanh mL}$$

In general, for a fin of any shape

$$R_{t,fin} = \frac{1}{\eta_f A_{surface}\bar{h}} = \frac{1}{\varepsilon_f A_{root}\bar{h}} \qquad (4.59)$$