SIMSEN

Simulation software for the analysis of electrical power networks, adjustable speed drives and hydraulic systems

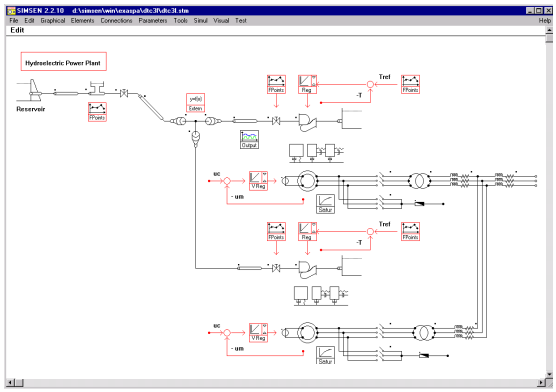

Main features

- Graphical input/output
- Modular structure with arbitrary topology
- No restriction on the network size
- Events detection and back-tracking
- Load-Flow calculation
- Initial conditions entirely, partly or not defined
- Stable operating point entirely saved
- Interactive read/write access to any parameter
- Harmonics analysis
- Parameterization
- SI or per unit outputs
- Available tutorials and help-on-line
- Runs under Windows XP/Windows7/32/64bits

Adjustable Speed Drives

- Special machines
- Power electronics converters
- Cyclo-converters
- Voltage Source Inverters (VSI)
- Analog / digital mixed signals simulation
- Control and regulation

Hydraulic systems

- Water hammer calculation
- Turbines 4 quadrants transient behavior
- Francis/Pelton/Kaplan and pump-turbines
- Pumps
- Surge tanks, surge shafts, differential ST
- PID Turbine governors
- Hydroelectric interactions
- Tidal turbines
- Cavitation/Water column separation

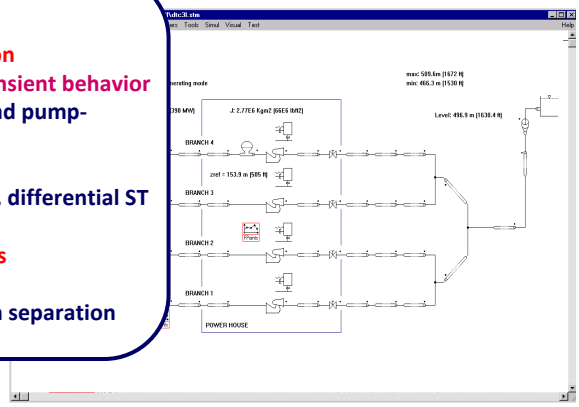

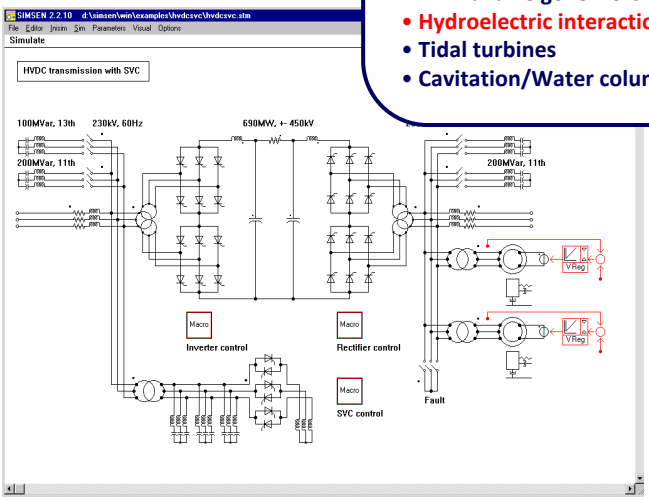

Electrical Power Networks

- Electrical machines
- Electromagnetic transients in AC/DC networks
- Transient stability and general fault analysis
- SubSynchronous Resonance (SSR)
- Torsional analysis
- FACTS, HVDC, SVC
- Control and regulation
- IEEE Standard excitation systems and PSS

Regulation part

- Easy definition of regulation structures
- Programmable unit, logical table
- S-transfer functions, regulator
- Digital devices, Z-transfer functions
- Control devices, ON-LINE FFT
- User defined DLL for control
- Coupling with MATLAB
- Coupling with external application (Labview, Hardware, etc)

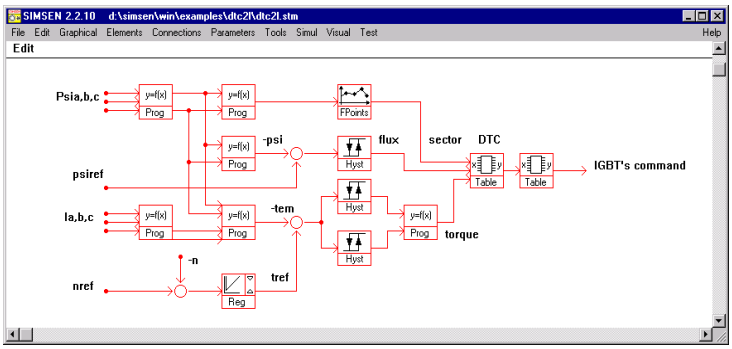

ÉCOLE POLYTECHNIQUE FÉDÉRALE DE LAUSANNE

EPFL, Swiss Federal Institute of Technology
CH-1015 Lausanne, Switzerland.
simsen@epfl.ch

Demo version available on the website: http://simsen.epfl.ch

13.08.2013

SIMSEN: History, Users / Partners

A modular software package for the digital simulation and analysis of power networks and adjustable speed drives

SIMSEN History and development:

The development of this software started in 1992. The idea was to develop a modular system able to do fast simulations of electrical power systems including semiconductors and regulation parts. The whole development has been based on practical examples from power networks and industrial drives. In both domains, the customer came with problems requiring the study of complex systems. In 1994, it was decided do develop an input/output interface. Thus other people could use the system. ***SIMSEN*** is sold since 1996. From 1996 to 1998, the system has been extended to simulate the digital behavior of the regulation part. The present version is able to simulate correctly mixed-signals systems (systems with analog and digital elements). Results provided by ***SIMSEN*** have been validated by comparison with measurements in industrial projects. Since 2001, SIMSEN is extended to hydraulic components for the modeling of hydraulic installations and of entire hydroelectric power plants: *SIMSEN-Hydro*.

SIMSEN Users / Partners:

ALSTOM Power Generation Ltd., Birr, Switzerland, Hydropower generation: on site world wide license

ALSTOM Power Generation Ltd., Birr, Switzerland, Turbo generators

ALSTOM Power Conversion Ltd., Belfort, France: Power Electronics and Adjustable Speed Drives

ABB Industry, Turgi, Switzerland, Power Electronics and Adjustable Speed Drives: on site Swiss license

ABB Industri AS Norway: Power Electronics and Adjustable Speed Drives

ABB (China) Ltd, Shanghai Branch, Shanghai, China

ABB Pte Ltd, Singapore

ALSTOM Hydro France Ltd., Grenoble, France

VOITH Hydro Holding GmbH, Heidenheim, Germany : on site world wide license

ANDRITZ Hydro AG, Switzerland, Austria

Litostroj Power d.o.o, Ljubljana, Slovenia

IMPSA Hydro, Mendoza, Argentina

Vetco Gray, Billingstad, Norway

ANSALDO Energia s.p.a. Italy : Power generation

WEIDMANN Transformer board AG, Rapperswil, Switzerland

Utilities: EOS, BKW, GROUPE E, SEL, SIG

AF-Consult Switzerland Ltd., Baden, Switzerland

Tractebel Eng. Coyne et Bellier, Gennevilliers, France

Lombardi Ltd, Minusio, Switzerland

Hydro Exploitation, Sion, Switzerland

IM Ingegneria Maggia SA, Locarno, Switzerland

ISL Ingénierie, Lyon, France

Power Vision Engineering sàrl, Ecublens, Switzerland

Hidroinstitut, Ljubljana, Slovenia

EDF-CIH, Le Bourget-du-Lac, France

SIMSEN-Electro: Presentation

Electrical systems simulation features of *SIMSEN* :

- Mixed analog-digital simulation of electrical systems.
- Modular structure enabling simulations of power systems with arbitrary topology in transient or steady-state conditions.
- Parameterization of components and modularity enables to built complex sub-models of new components.
- Analysis of the dynamic behavior of complex electrical systems comprising electrical machines, power electronics converters and typical power system components (transmission line,..)
- Calculation of stable initial conditions with load-flow procedure.
- Possibility to interact with external programs or devices
- Has been validated by comparison with measurement on many industrial cases.

• Example of application: HVDC system, fault recovery after short circuit on the AC grid

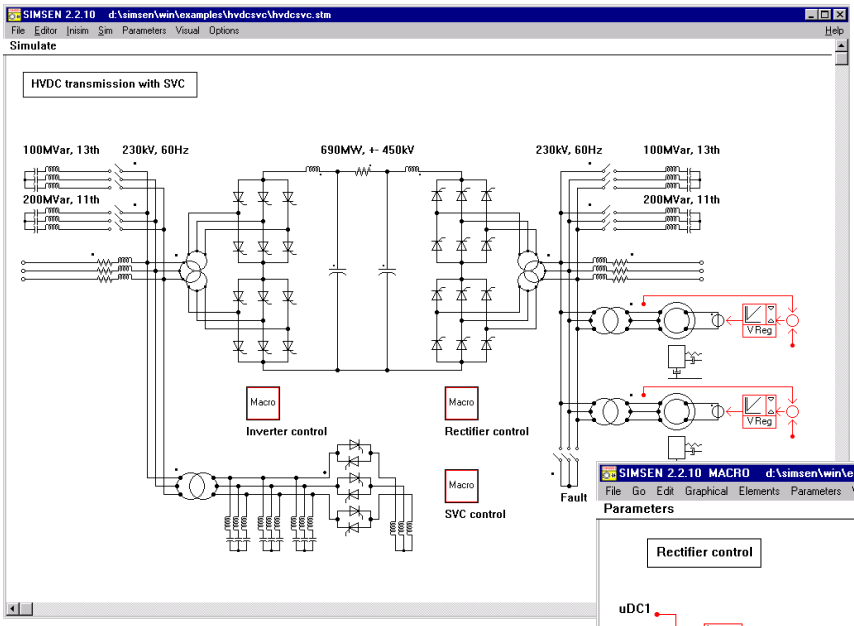

• Control of the rectifier

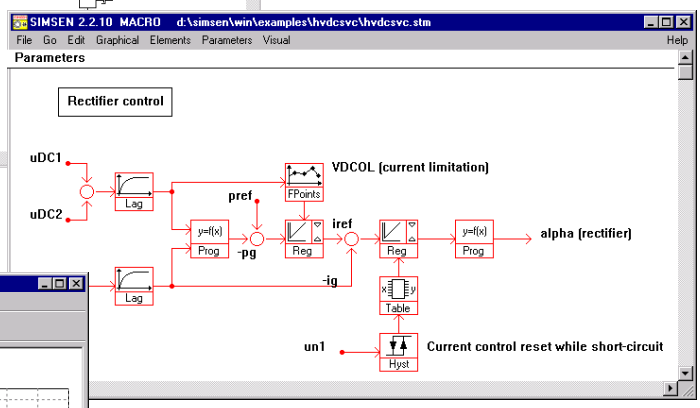

• Voltage and current at the DC-link level during the fault

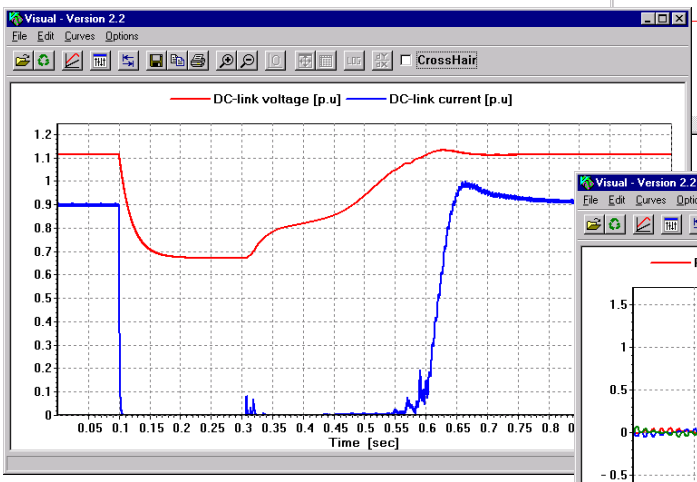

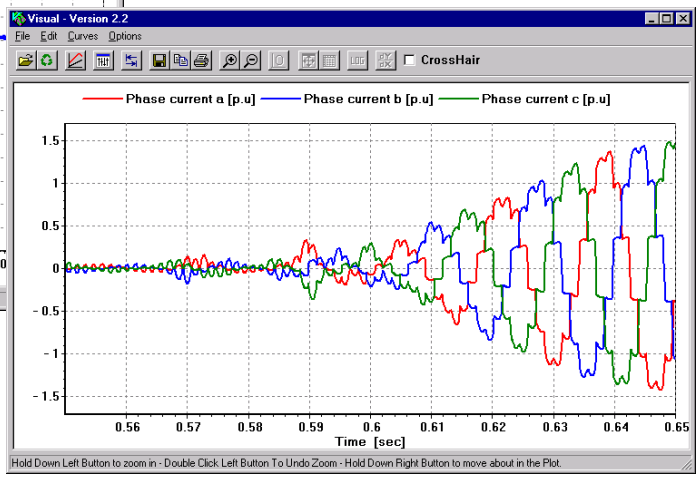

• Currents on the AC grid during recovery

SIMSEN-Electro: List of available units

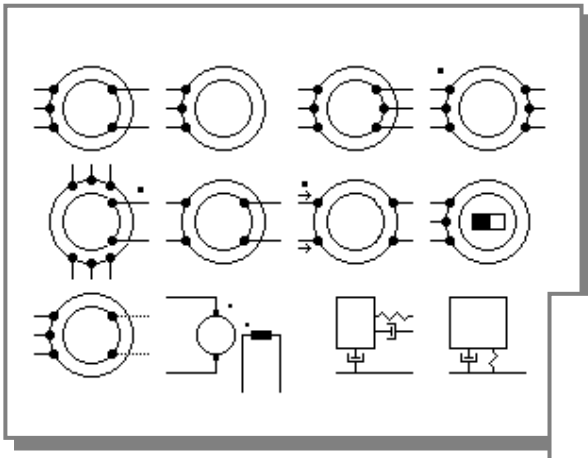

Electrical machines

Three-phase synchronous, single-phase synchronous, 6-phase synchronous, three-phase generalized, three-phase induction with wound rotor, three-phase induction with squirrel cage rotor, two-phase induction, three-phase permanent magnet, DC motor, mechanical mass, stator mass

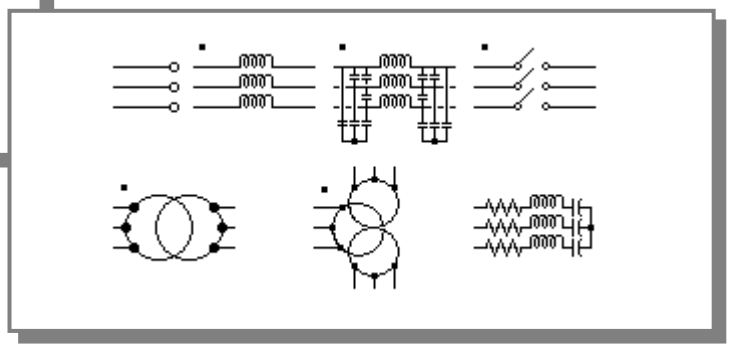

Three-phase elements

Voltage supply, transmission lines, circuit breaker, phase shifting transformer, transformer with three windings, load

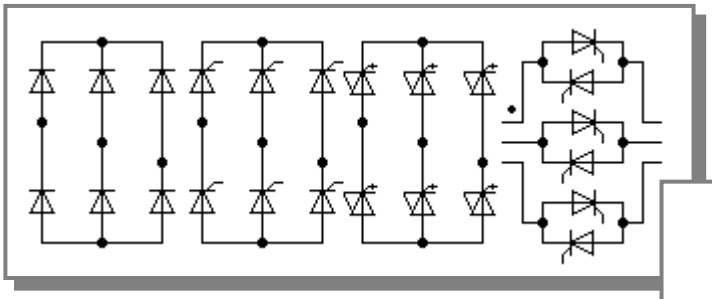

Three-phase converters

Rectifier (diode), current converter (thyristor), voltage inverter (thyristor GTO), current variator (thyristor)

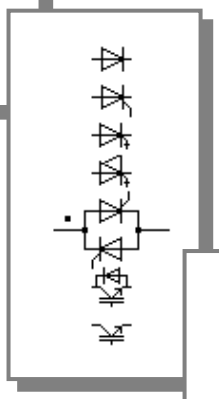

Semiconductors

Diode, thyristor, thyristor GTO, thyristor GTO + diode, triac, IGBT

Single-phase elements

Voltage supply, Resistor, inductor, capacitor, varistor, circuit breaker, linked inductor, transformer

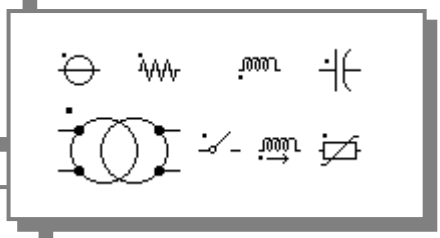

Analog function units

Program, S-transfer functions, regulator, logical table, points function, external DLL

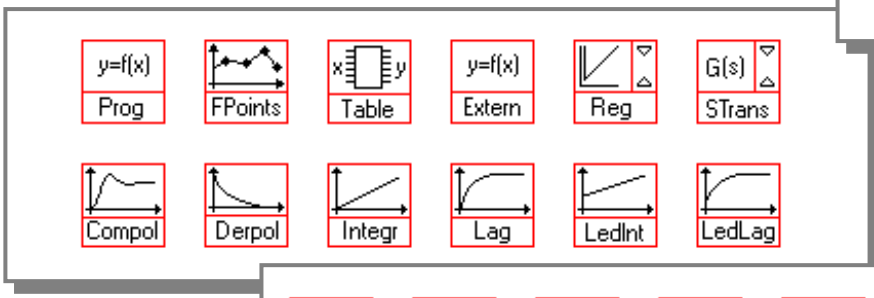

Digital function units

Averager, sample, limiter, pulse generator, Z-transfer function, hysteresis, on-line FFT

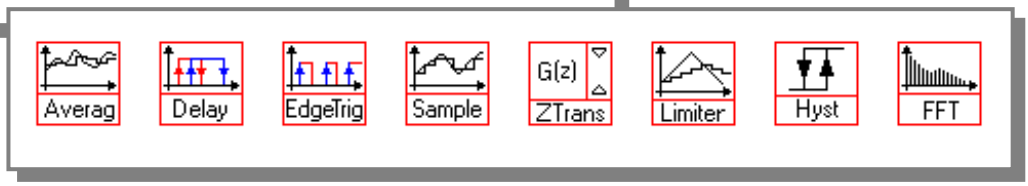

SIMSEN-Hydro: Presentation

Hydraulic Extension of *SIMSEN* :

- Modeling of hydraulic components based on electrical analogy.
- Based on a modular structure enabling digital simulations of the behavior in transient or steady-state conditions of entire hydroelectric power plant with arbitrary topology.
- One set of differential equations including hydraulic components, mechanical masses, electrical units and control devices ensures that the hydroelectric interactions are properly taken into account.
- Parameterization of components and modularity enables to built up complex sub-models of new components.
- Analysis of dynamic behavior of complex piping systems.

• Example of application: total load rejection of a 2 Francis turbine units power plant

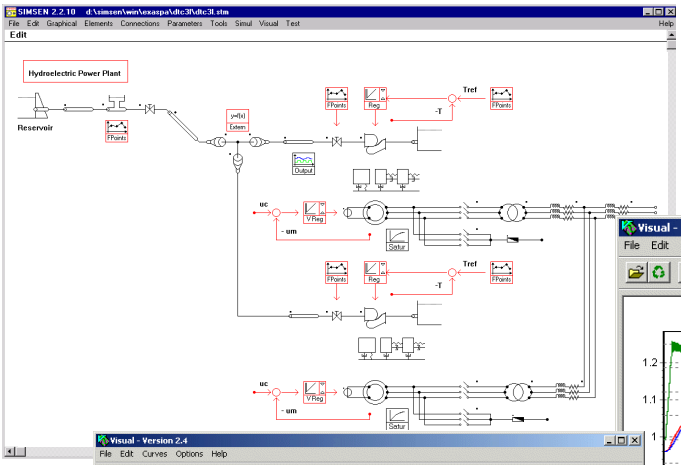

Surge tank transients

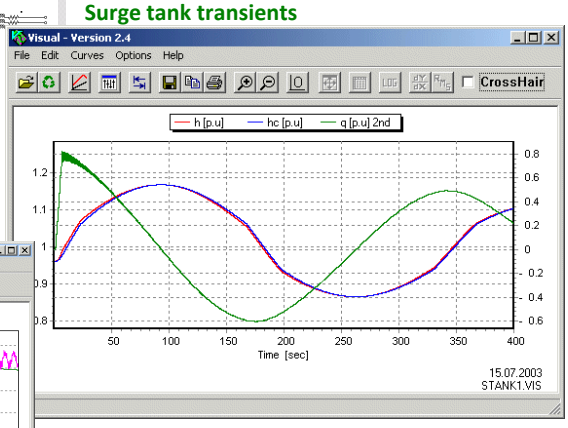

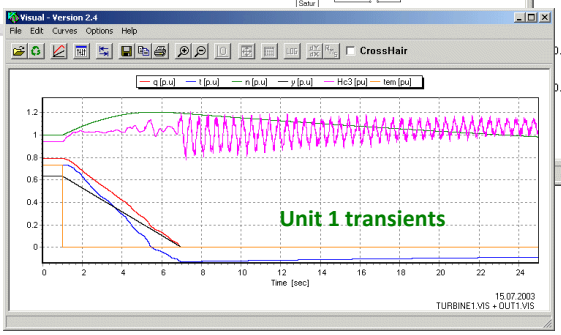

Unit 1 transients

• Out of phase synchronization of unit 1…

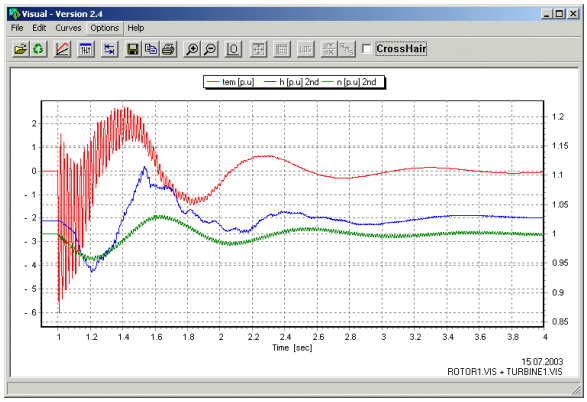

… Effects on unit 2

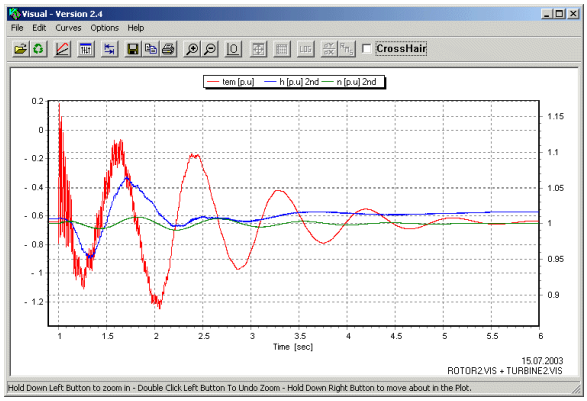

SIMSEN-Hydro: List of available units

Hydraulic Extension of *SIMSEN* :

Hydraulic Units:

- Reservoir
- Pipe
- Viscoelastic Pipe
- Valves
- Discrete Losses
- Surge Tank, Surge Shaft, Surge Vessel
- Air vessel
- Cavitation Compliance with Mass Flow Gain Factor
- Pressure Sources
- Pumps
- Francis Pump-Turbine
- Pelton Turbine
- Kaplan Turbine
- Propoeller turbines

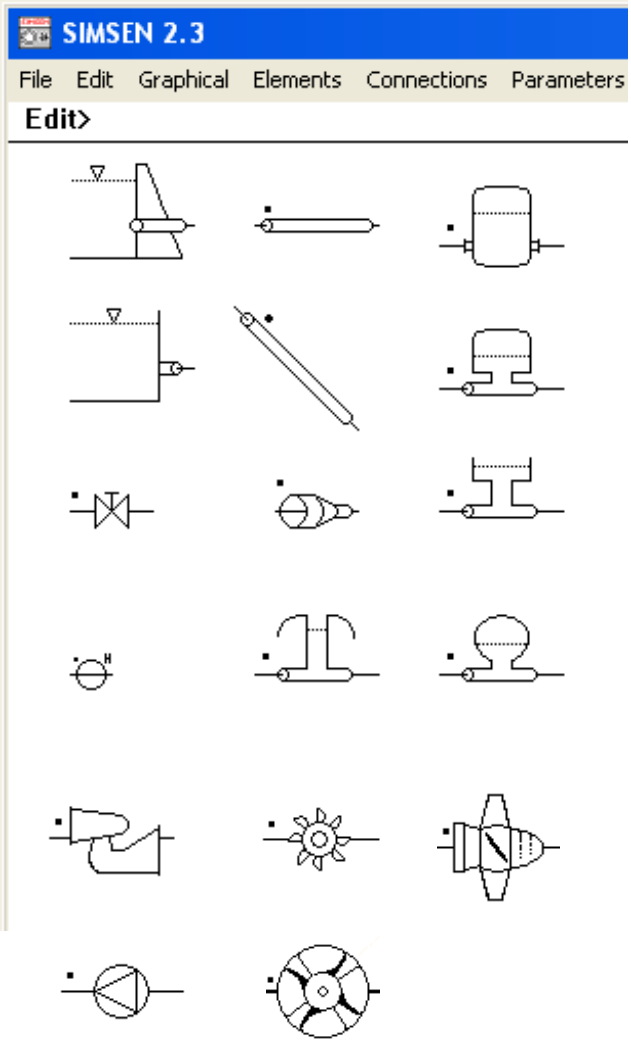

Pipe model based on electrical equivalent

Momentum and mass conservation equations provide a set of hyperbolic partial differential equations solved by finite difference method using centered and Lax scheme leading to an equivalent electrical circuit modeling a pipe of length dx. The capacitance, inductance and resistance respectively accounts for compressibility, inertia and losses effects.

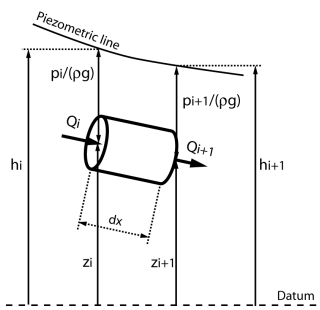

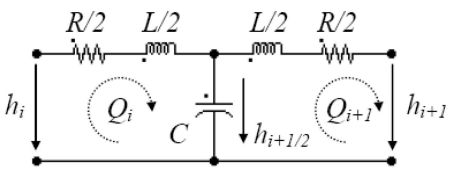

Turbine models based on turbine characteristics

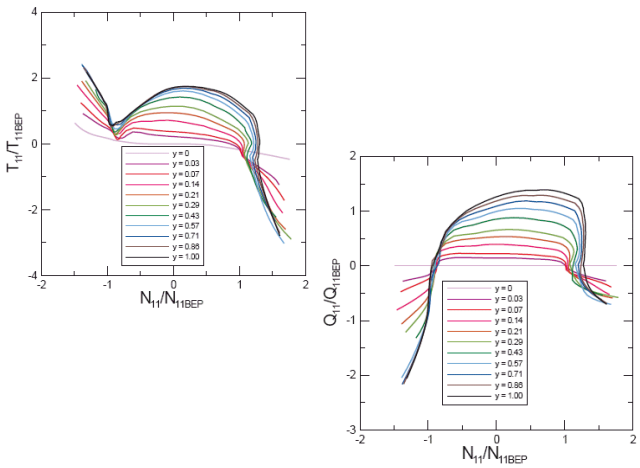

SIMSEN: New features of version 2.2.10

New features of *SIMSEN* :

- Calculation speed improvement (at least 2 times faster).
- Equations parser in main file and in new unit PROG.

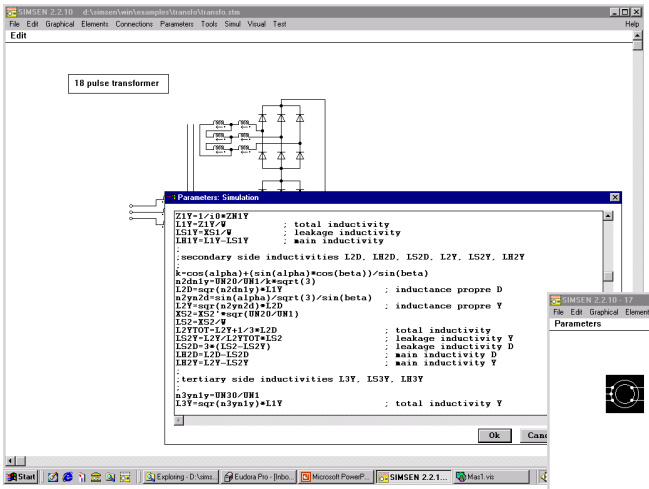

- Synchronous machine parameters conversion from characteristic quantities to equivalent circuit diagram

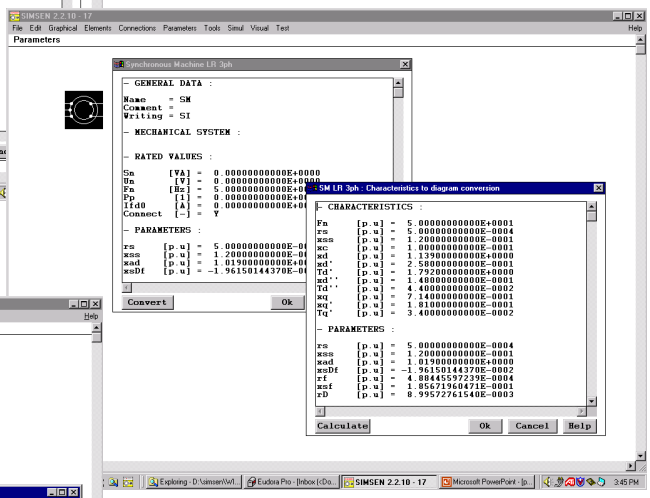

- ON-LINE Fast Fourier Transform (FFT)

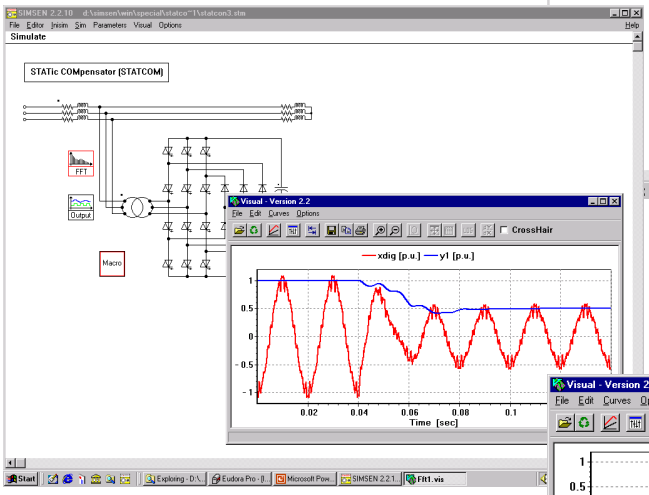

- New output interface VISUAL 2.2

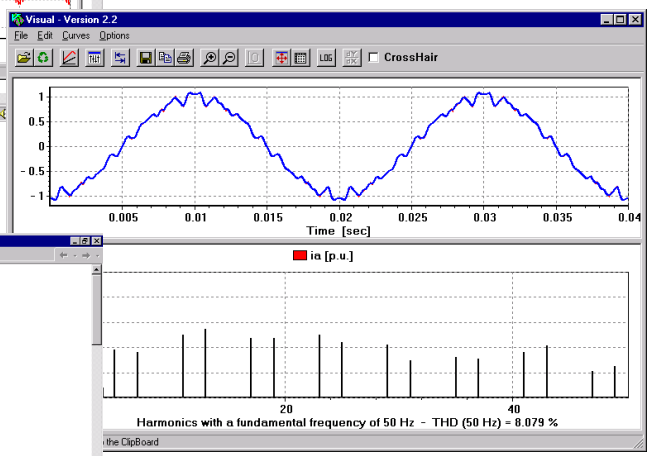

- User defined DLL for control (C++, PASCAL, etc...)

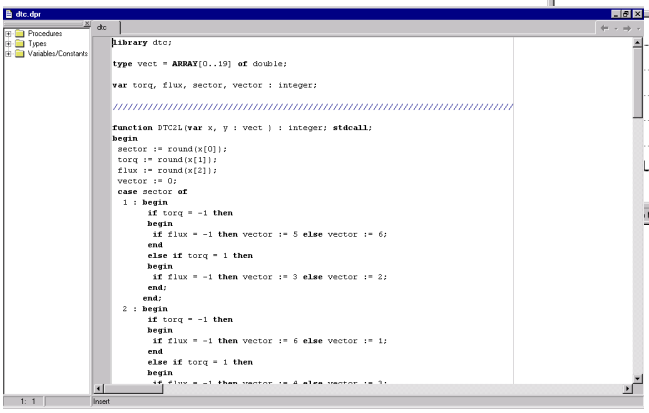

SIMSEN: New features of version 2.3

New features of *SIMSEN* :

- Editing of large files
- New types of voltage regulators for ALSTOM POWER GENERATION
- Batch processes for background simulations

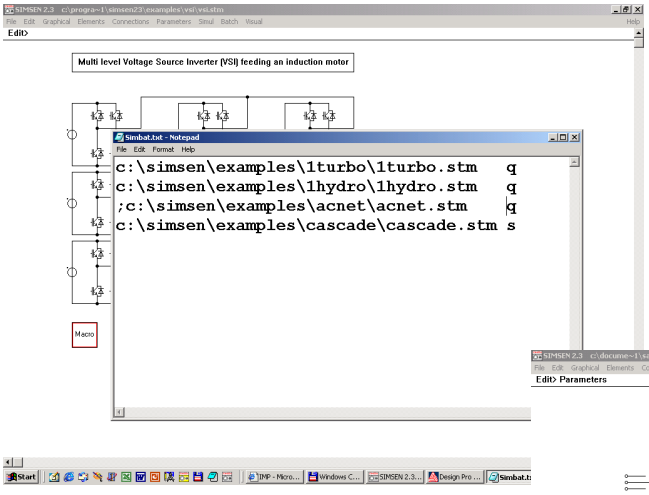

- Induction machine parameters conversion to per unit equivalent circuit diagram

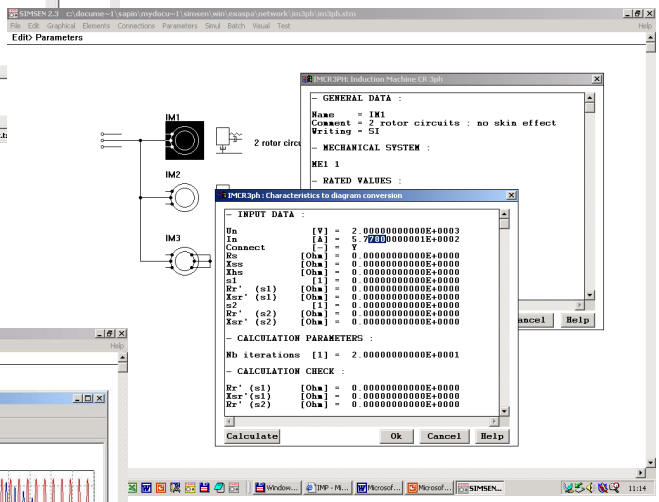

- Variable coupling coefficient of linked inductors

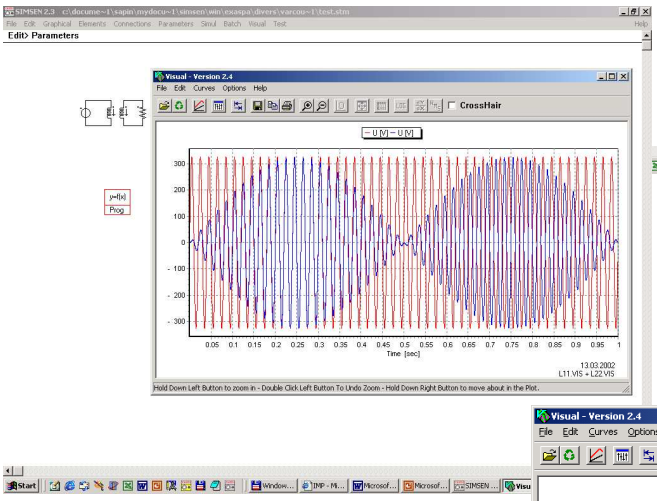

- New output interface VISUAL 2.4

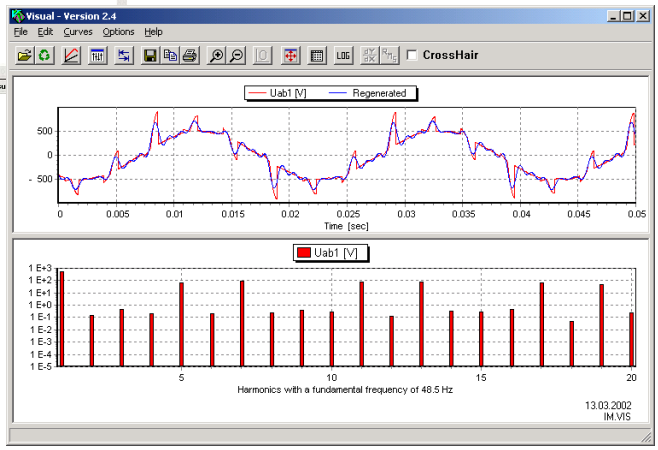

SIMSEN: Ongoing and future developments

Ongoing and future developments of *SIMSEN* :

New input interface

Graphical features updated to Windows 64 bits standards

Extended Parser: command language, programmable unit

Calculation windows and drawings (for documentation)

Graphical connections for control (user customized)

User-defined models

Modeling

More detailed semiconductors (Spice Models)

Cables, Transmission Lines (Propagation phenomena)

Saturation with magnetic circuits models (Transformers)

Open Channels

Propellers

Discharge source

Inclined surge shaft

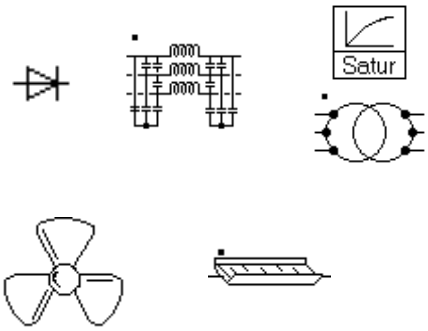

Analysis

Eigen Values, Eigen Vectors Calculation and Representation

Harmonic analysis

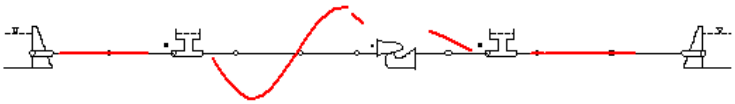

DSP code generation

Automatic generation of DSP code for control systems

Simulation system

AC analysis

Load-Flow with semiconductors

LINUX Version

New Modules of *SIMSEN* :

Water column separation

Wind turbine

Tidal turbine

Surface functions

Coupling with CFX and ANSYS

Coupling with MATLAB

Coupling with external application (labview, Hardware, etc)

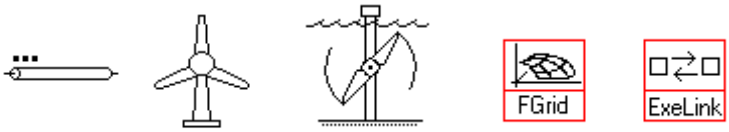

SIMSEN-Electro: SubSynchronous Resonance (SSR)

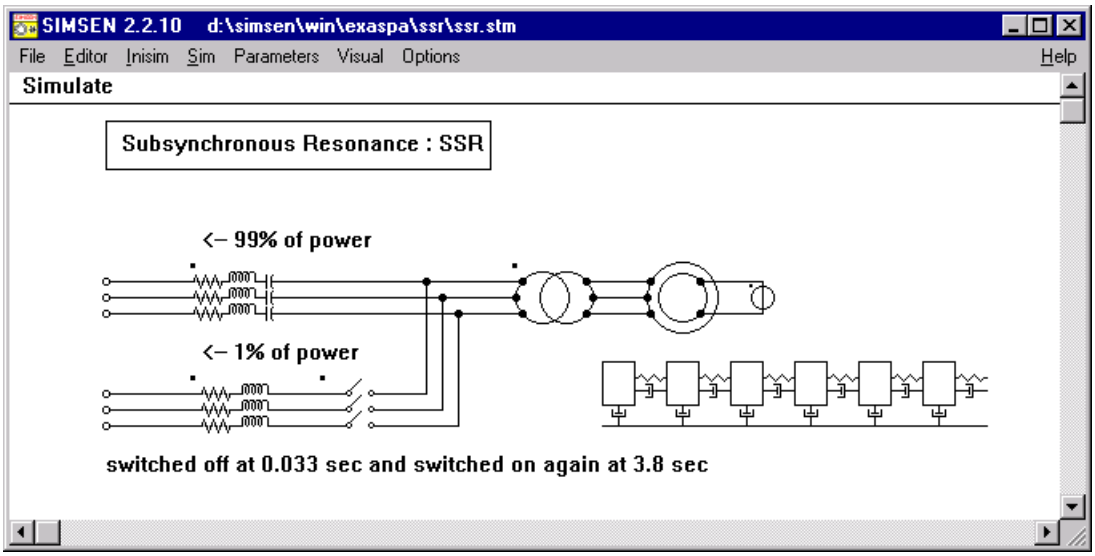

This example shows the possibilities of ***SIMSEN*** to take into account correctly the electrical and mechanical interactions in power systems. The SubSynchronous Resonance (SSR) is an important problem in compensated power networks. Due to a change of topology or impedance of the compensated network, electrical resonance may match the mechanical resonance in the shaft of large generators. Such a resonance may destroy the whole shaft of generators.

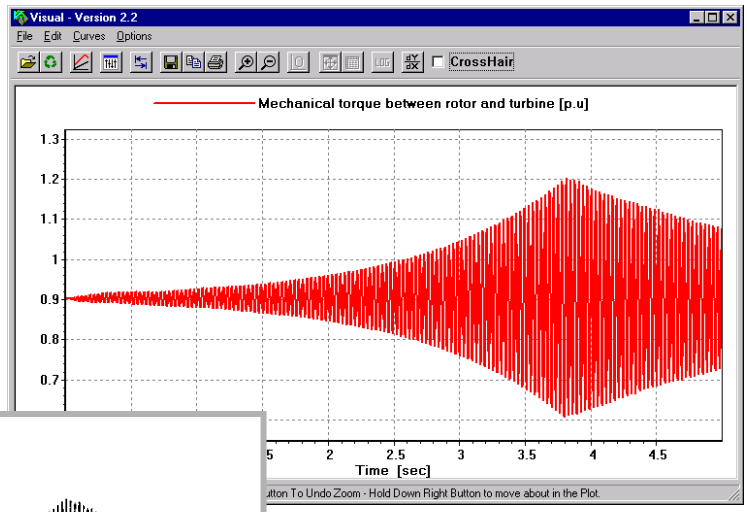

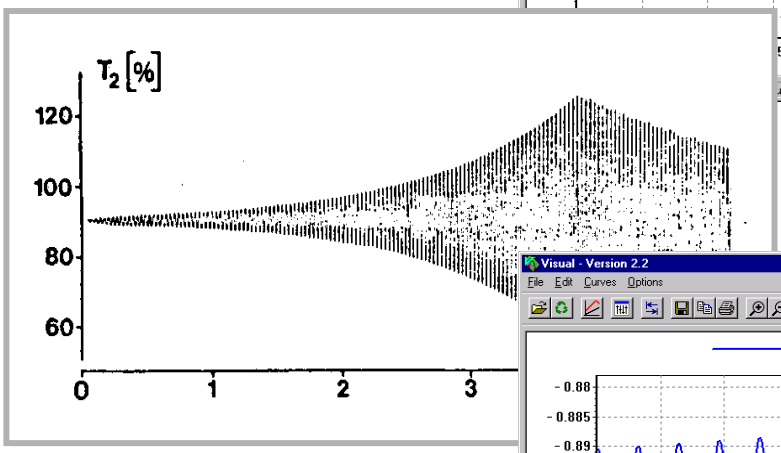

The black curve presents the results obtain by a specific program developed to analyze SSR problems.

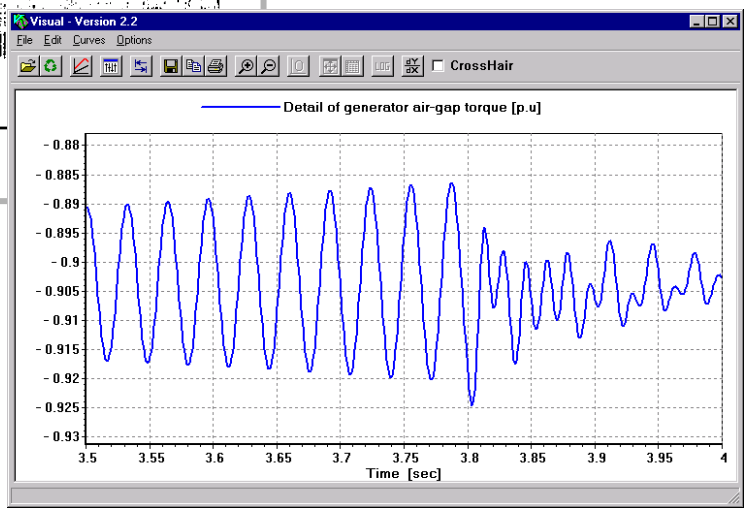

The example is based on an IEEE paper about SSR. The main goal of this simulation is to check the computed results with analytical investigations. Additionally, the simulation has been compared with a specific program developed only to analyze SSR. ***SIMSEN*** and the special program gave exactly the same results.

SIMSEN-Electro: Back to back start-up

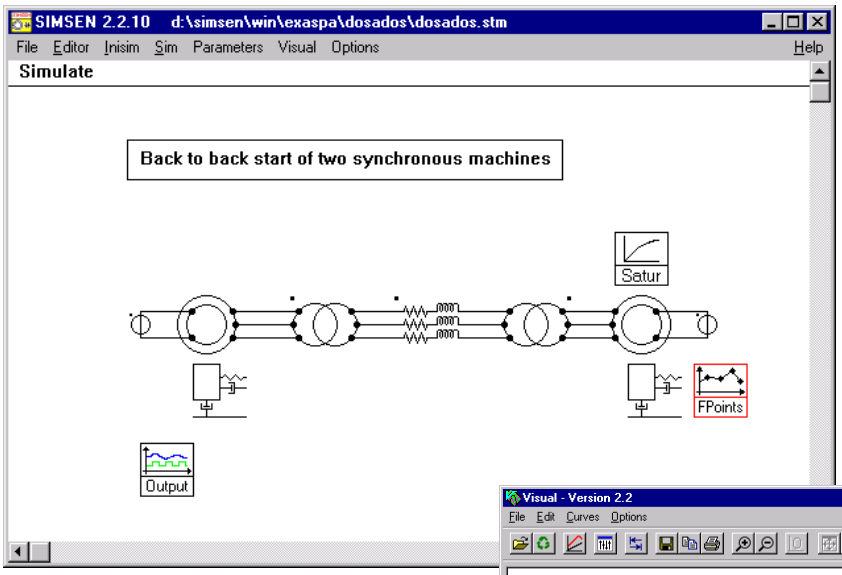

The back to back start-up of synchronous machines is a very suitable procedure to start smoothly a synchronous motor in pump operating mode with the help of a second synchronous generator driven by a turbine. The generator works like a variable frequency voltage supply. Both machines have to be connected through a transmission line. ***SIMSEN*** is also able to simulate a direct asynchronous start-up.

Both machines are excited at standstill with a specified field current depending on the operating mode (generator or motor). The generator is accelerated by the mechanical torque of the turbine. The voltage increases as well as the frequency at the terminals of the generator. The excited rotor of the motor follows the rotating field and get synchronized after some oscillations due to its initial position relative to the poles wheel.

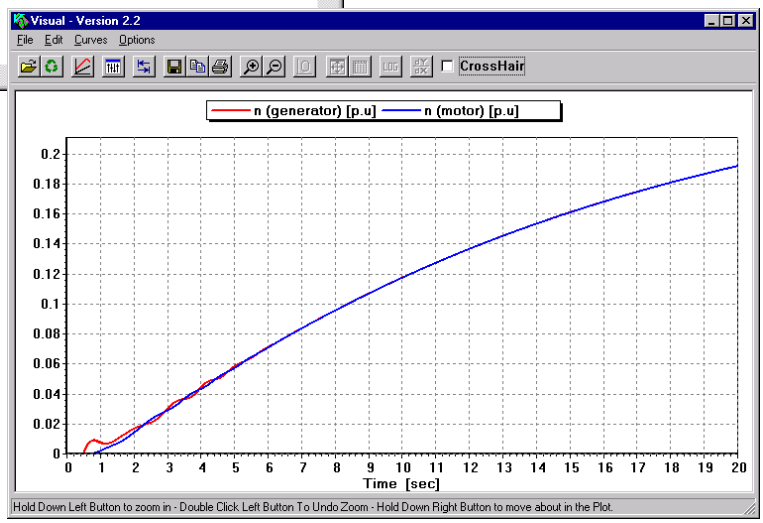

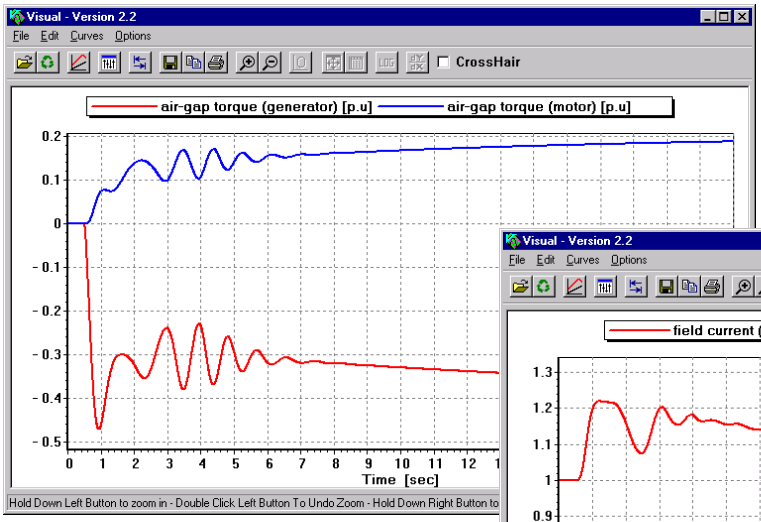

The above curves represent the speed of both synchronous machines. The pump friction torque also has been taken into account. The mechanical driven torque of the turbine is kept constant.

The 2 last figures represent the air-gap torque of both synchronous machines as well as their field currents. Depending on the rotor positions and field currents, the back-to-back start-up may fail.

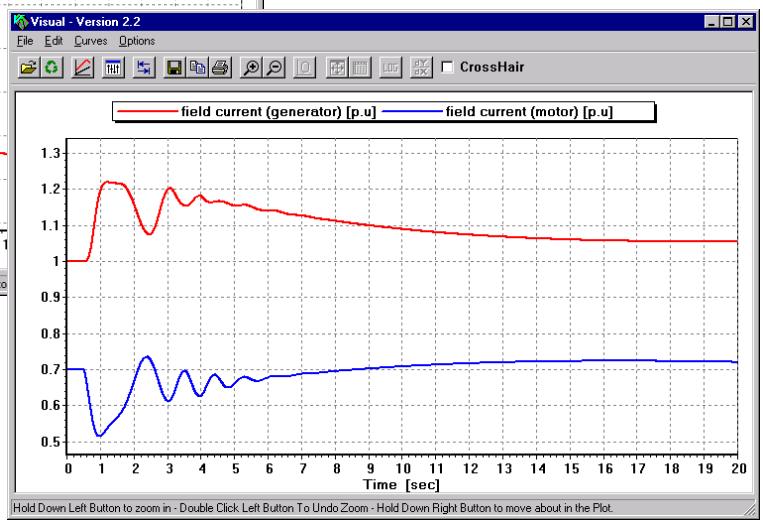

SIMSEN-Electro: Short circuit in a large power plant

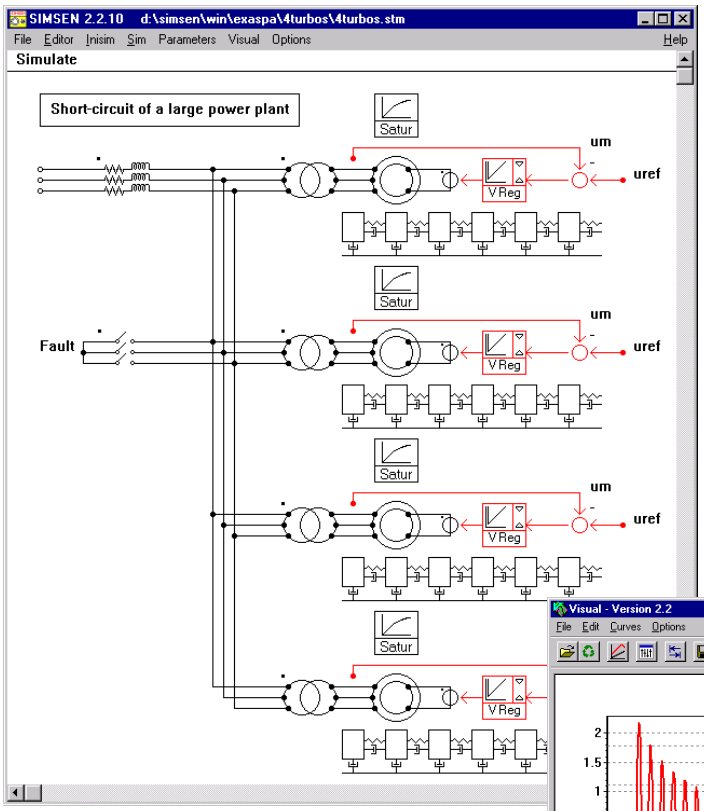

This example shows the possibilities of ***SIMSEN*** to simulate multi-machines interactions in power systems. Therefore, the user can build the mechanical shaft including an unlimited number of masses. These masses are connected together with springs and damping elements. A mechanical shaft can even contain several machines. The saturation effect of the main magnetic circuits of the machines are modeled. The transformer models are able to take into account the phase shifting between the primary and the secondary sides. The regulation part consists on four voltage regulators acting on each synchronous generator. The fault is generated by using a circuit-breaker. The ON/OFF orders can be easily defined by the user.

All the initial conditions are automatically calculated using an additional Load-Flow program (rotor angle positions, mechanical angles and excitation current). Single-phase faults can also be simulated by defining ground connections.

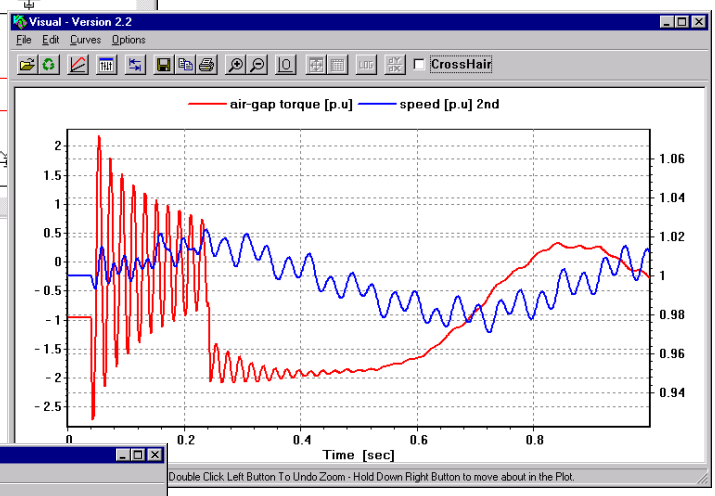

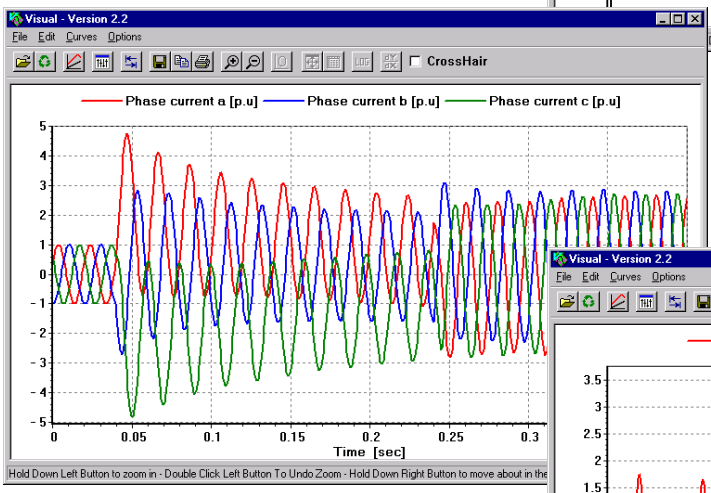

As the synchronous machine model is taking into account the sub-subtransient reactance, it is possible to respect the real transient behavior of a large generator, specially in network faults analysis.

The simulation results can be used for a torsional analysis in which the mechanical stresses can be investigated. All the electrical and mechanical computed values are available without any special scope definition.

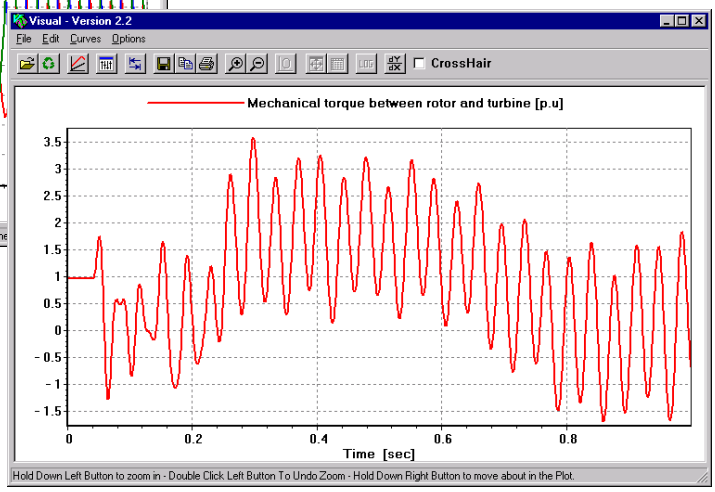

SIMSEN-Electro: Transient stability in a large power network

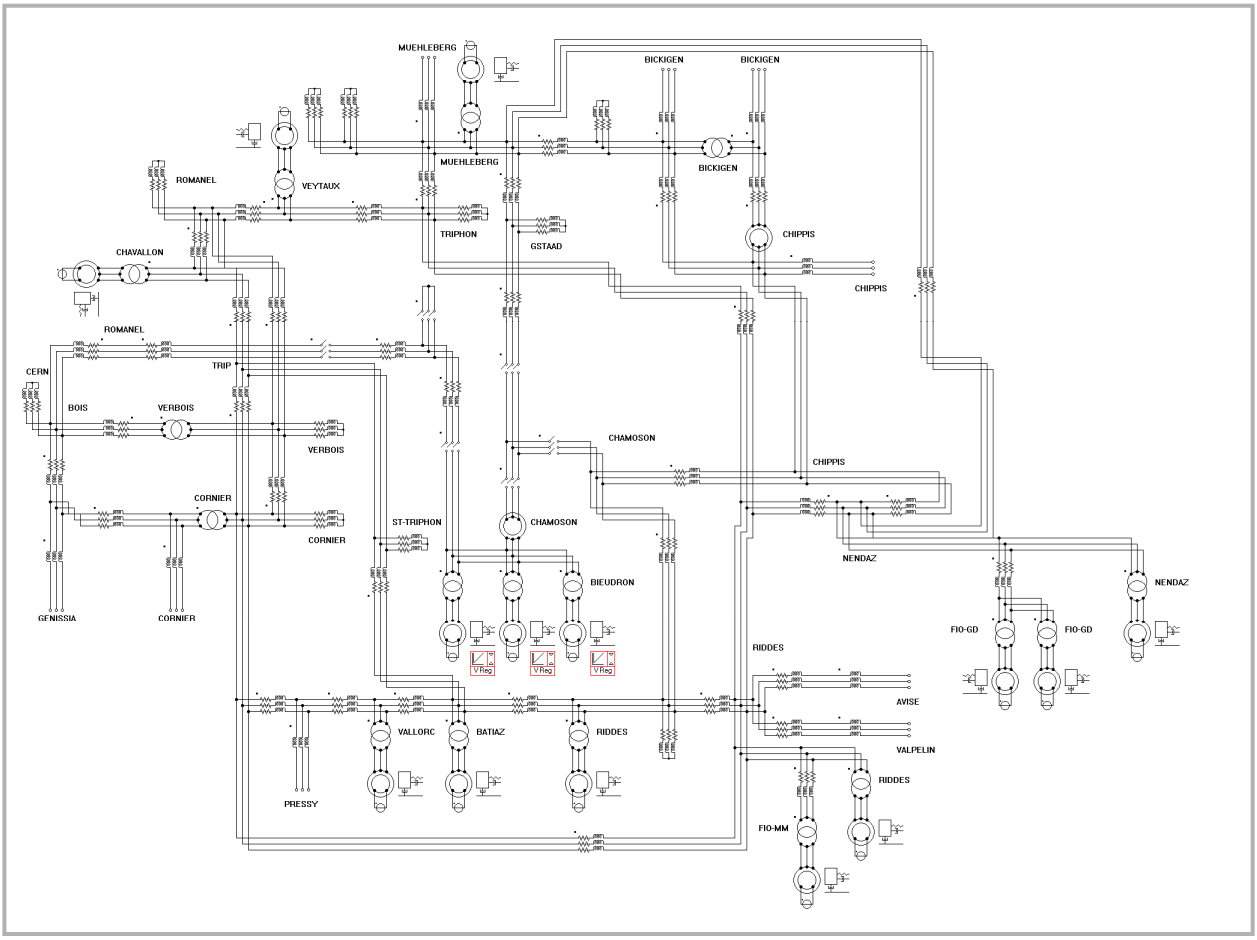

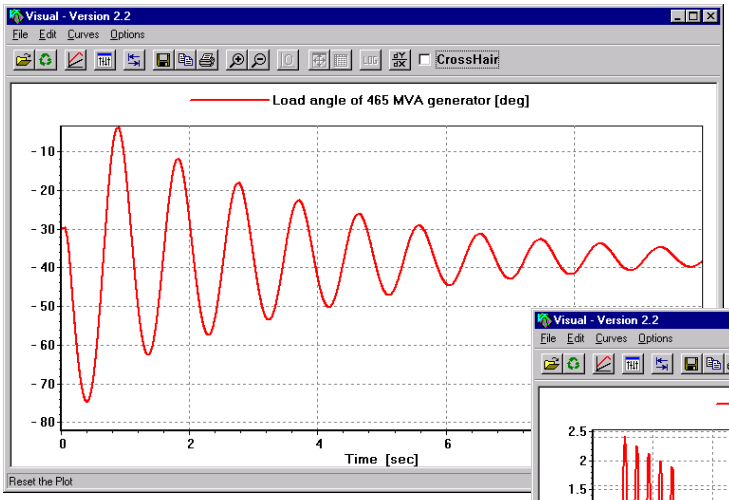

This example illustrates the potential of ***SIMSEN*** to simulate large power networks (No restriction on the network size). The additional Load-Flow program calculates automatically all the initial conditions (Phase currents, field currents and rotor positions of synchronous machines). The results can be used to determine the transient stability of the entire network.

The simulation results show the transient behavior of a large 465 MVA hydro-generator after a three-phase short-circuit on a 400 kV transmission line. All the results for all the elements present in the network can be saved and analyzed after the computation. The Load-Flow operating point has been compared successfully with measurements.

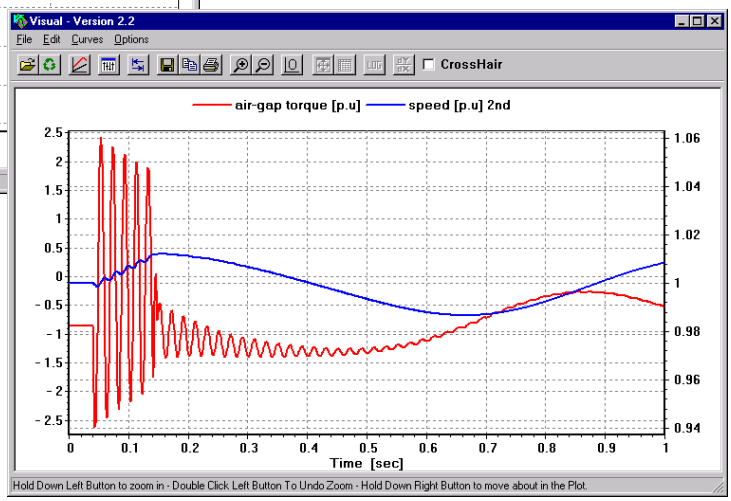

SIMSEN-Electro: HVDC network with SVC

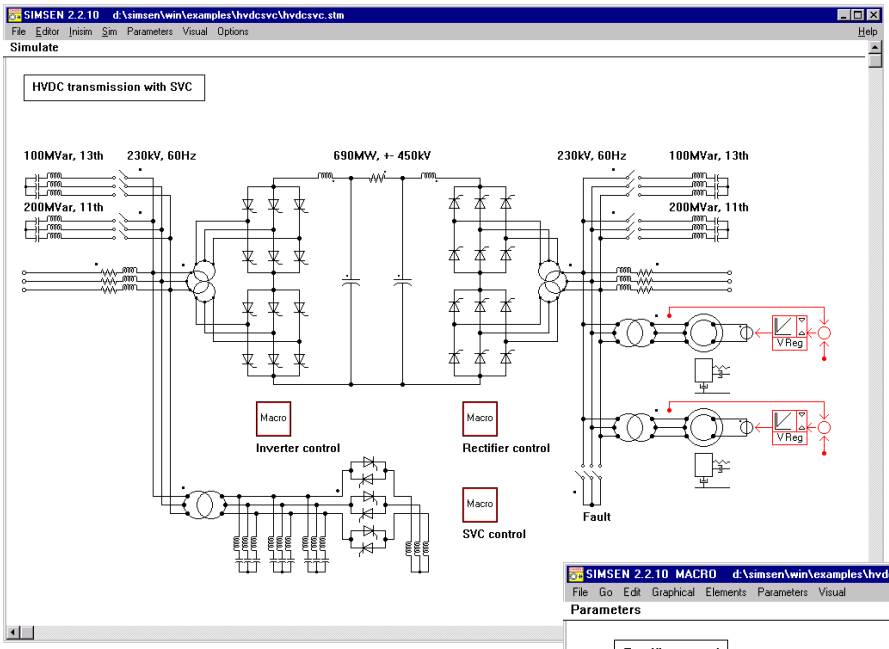

This example illustrates the possibility of ***SIMSEN*** to simulate complex HVDC networks including power plants, 12-pulse thyristors converters, filters, SVC and all the control and regulation devices. Both rectifier and inverter of the HVDC are modeled with all the semiconductors. Three - windings transformers also are taken into account on both sides of the HVDC. They allow the 30° phase shifting for 12-pulse operation.

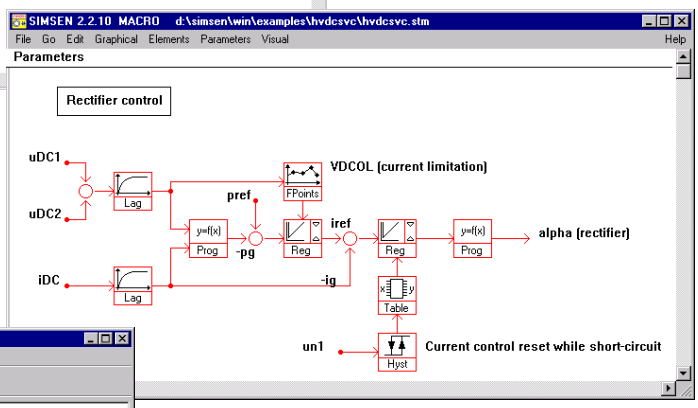

The rectifier and inverter regulation is completely modeled, especially the extinguishing angle regulation of the inverter. Simulation results show the behavior of the HVDC after a three-phase short circuit at the rectifier AC grid (power plants).

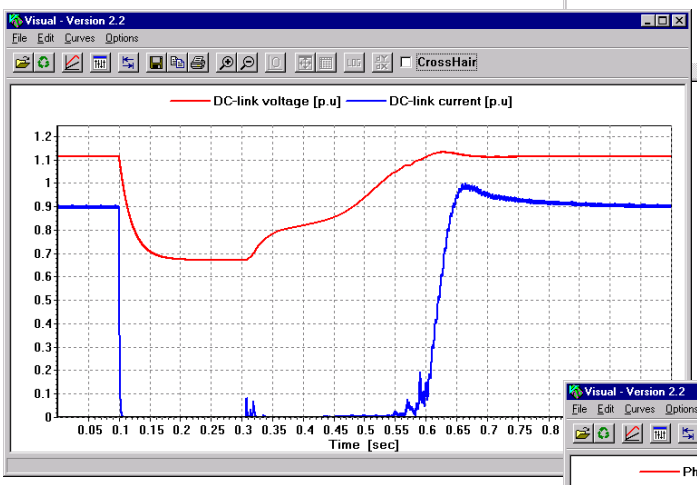

For large and complex networks, ***SIMSEN*** offers the possibility to add, replace or remove components without restarting the simulation from zero. This great advantage allows the study of networks including a large number of electrical components. The user can build his example step by step by adding elements and restabilizing the circuit.

When the system is stable enough, the user can add circuit breakers (or other elements) and define faults to be simulated. Once done, it is possible to continue the simulation with saved initial conditions. For that special example, it is possible to analyze the fault recovery after a short circuit at the rectifier AC grid. In this goal, the regulation contains special functions like VDCOL (Voltage Dependant Current Order Limitation). This functions allow a smooth recovery of the HVDC.

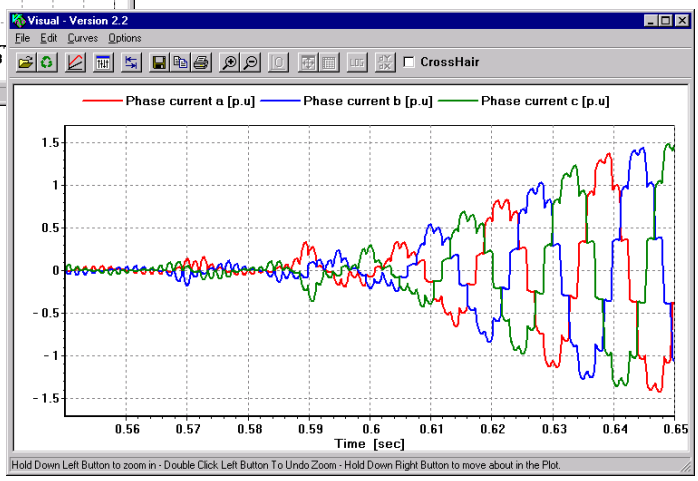

SIMSEN-Electro: Three-level Voltage Source Inverter (VSI)

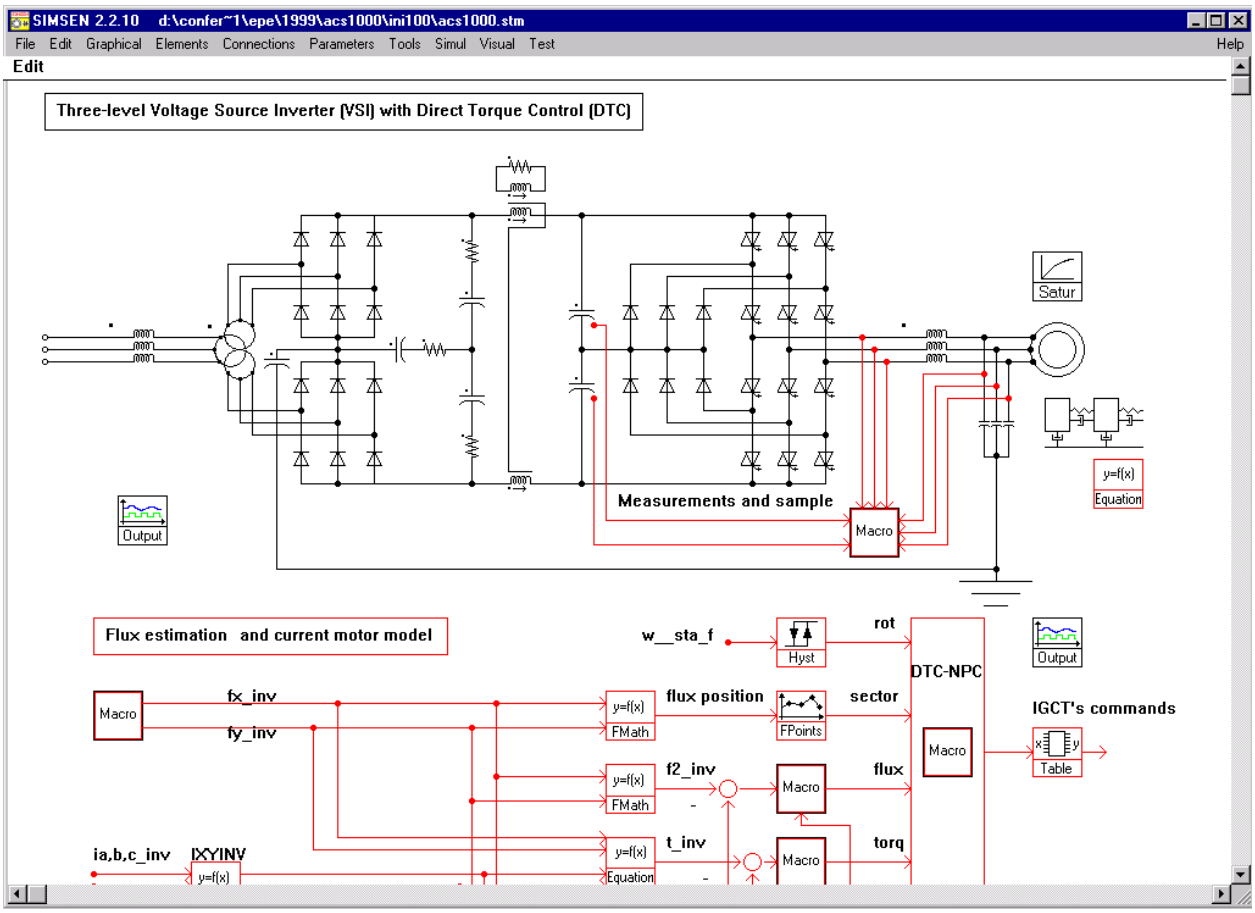

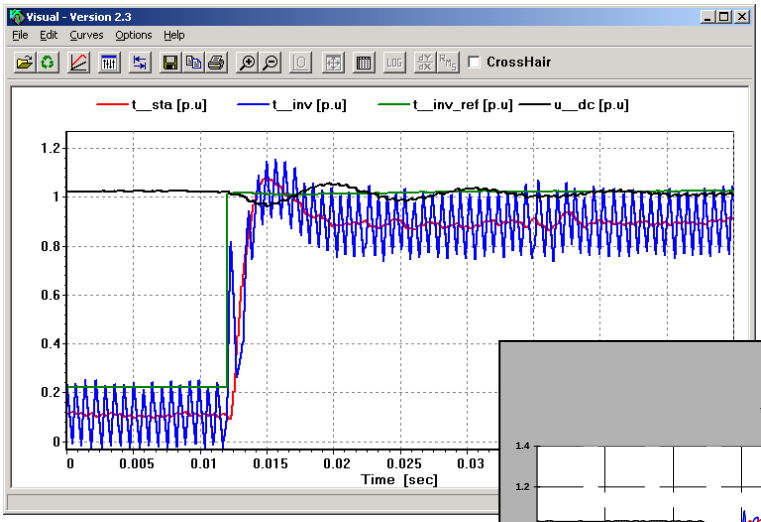

This example is based on a real industrial application in the field of Medium Voltage Drives (MVD). It is very important to simulate correctly the three-level inverter with all the semiconductors. The inverter is tuned by a Direct Torque Control (DTC). The entire regulation has been implemented taking into account the real digital behavior.

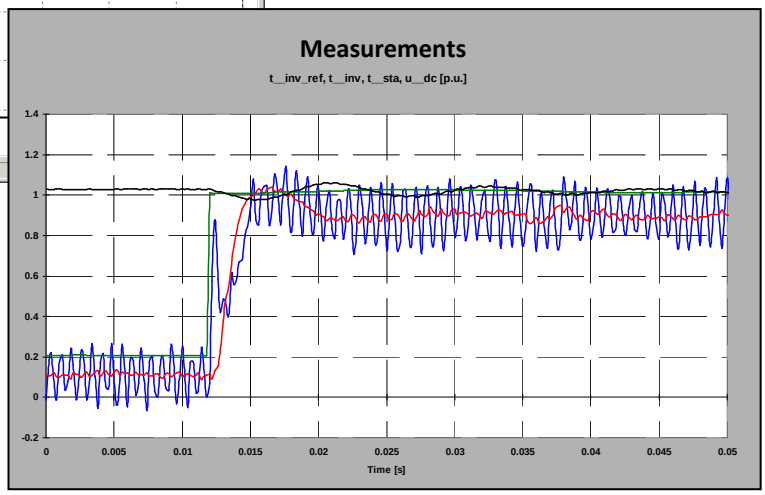

The entire system has been modeled using more than 200 units to simulate correctly the flux estimation, the DTC with multi-level hysteresis control, the switching frequency control, speed control. This example shows the potential of ***SIMSEN*** to simulate mixed signals. Simulation results present the step response behavior of the drive.

SIMSEN-Electro: Slip-energy recovery drive VARSPEED

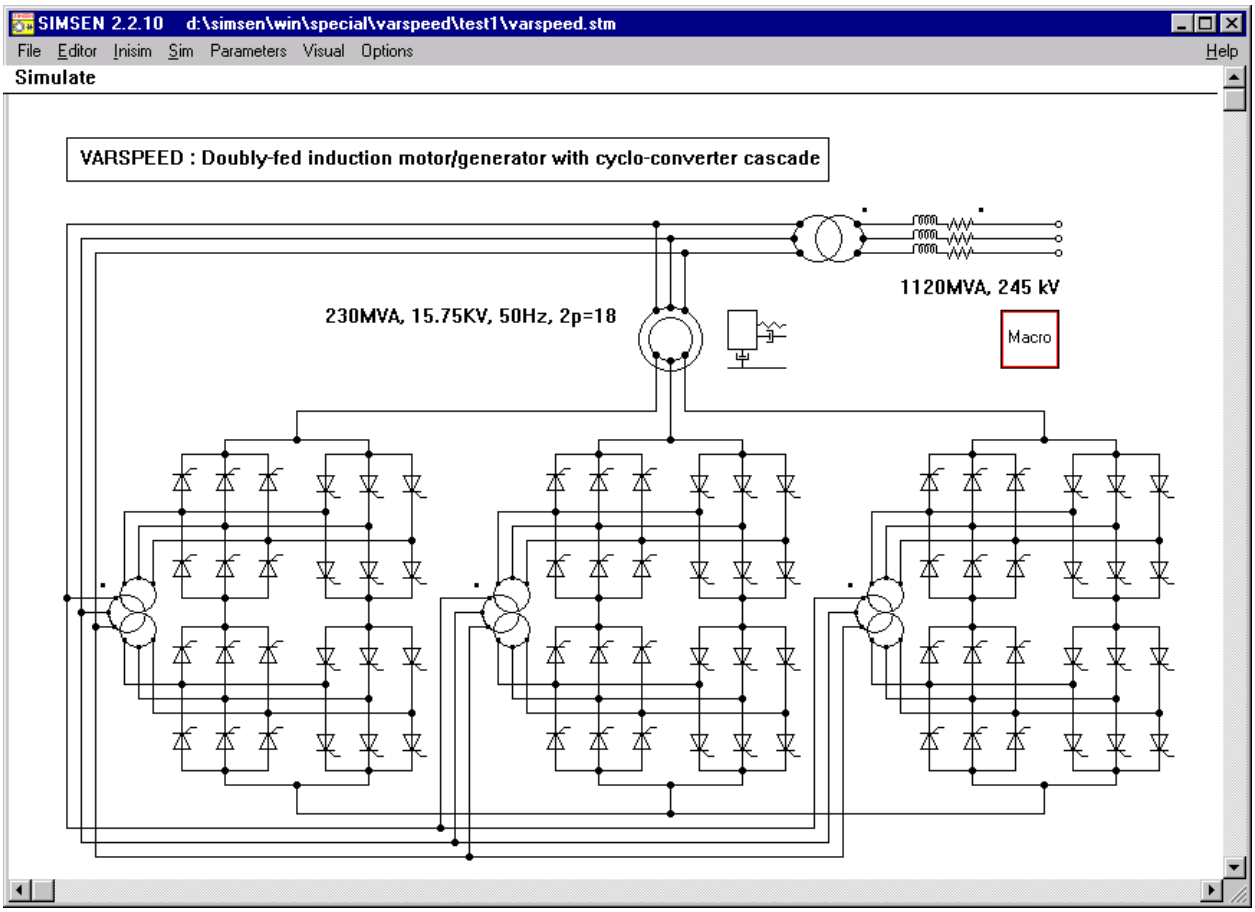

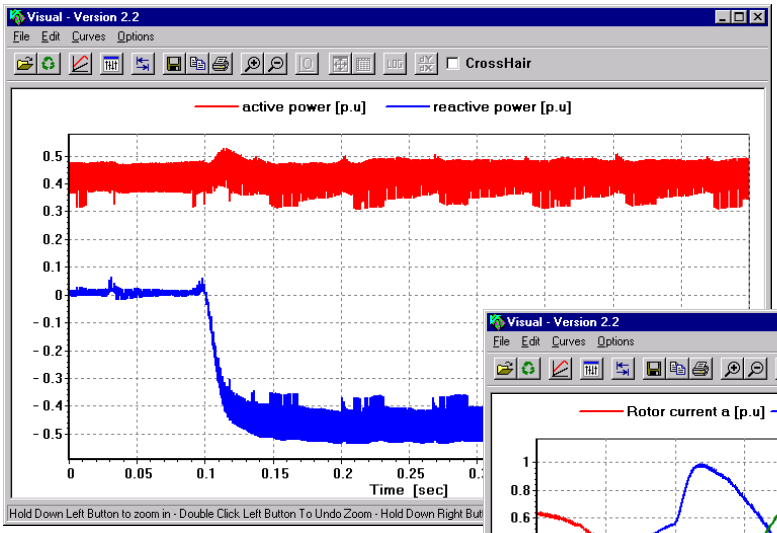

This example shows a large pump storage system called VARSPEED. The induction machine is supplied by a 12-pulse cyclo-converter. The 72 thyristors are considered without any assumptions. Such a system is able to regulate active and reactive power independently. The drive can work as power generation as well as pump.

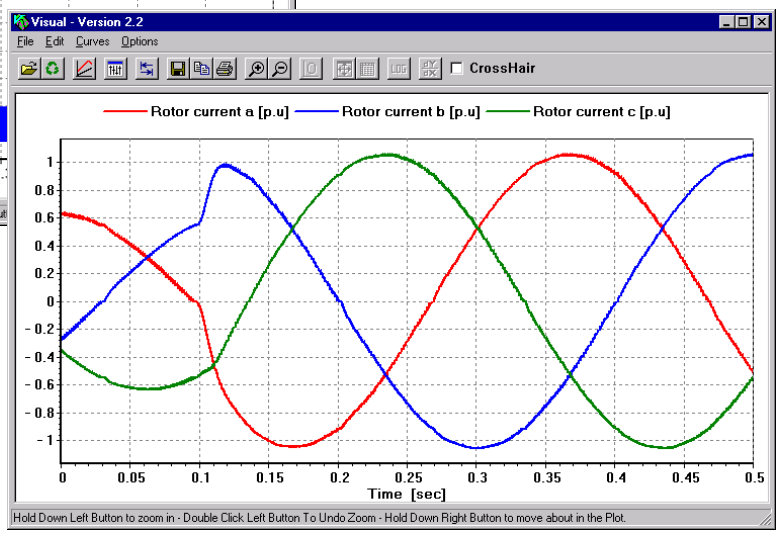

The simulation illustrates the response of the motor/generator after a sudden modification of the reactive power injected to the AC grid. It also shows the high stability of the VARSPEED in transient behavior. Many other aspects can be analyzed with ***SIMSEN***: faults and protection, stability to the network, efficiency.

SIMSEN-*Electro*: 12-pulse Load Commutated Inverter (LCI)

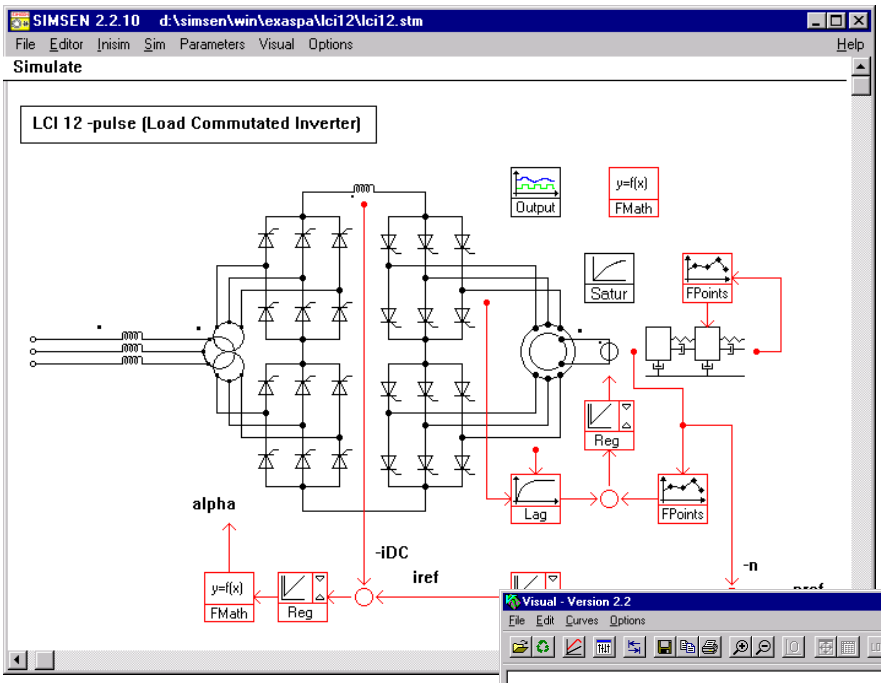

This example presents a large industrial adjustable speed drive. The Load Com-mutated Inverter (LCI) is supplying large synchronous machines having 6 phases. Thus, the 6th harmonic of the air-gap torque is automatically eliminated by the 12 pulse inverter. The system is taking into account all the regulation parts, the 6-phase synchronous machine, the mechanical shaft and the frequency converter. The mechanical load corresponds to a 20 MW fan for wind tunnel applications.

The simulation results show the response of the system after a change of the speed set value. The load represents a large fan and has been modeled with a square function of the speed. The simulation has been used to perform a torsional analysis and to design the inverter in function of the extinguishing angle of the inverter at full load.

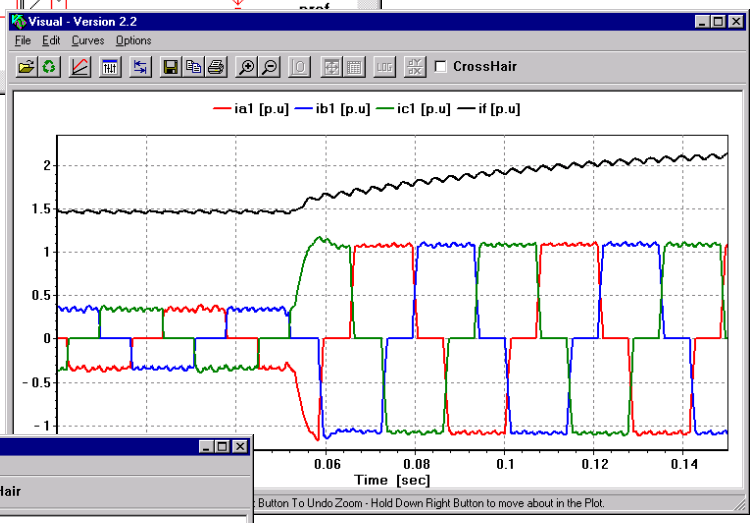

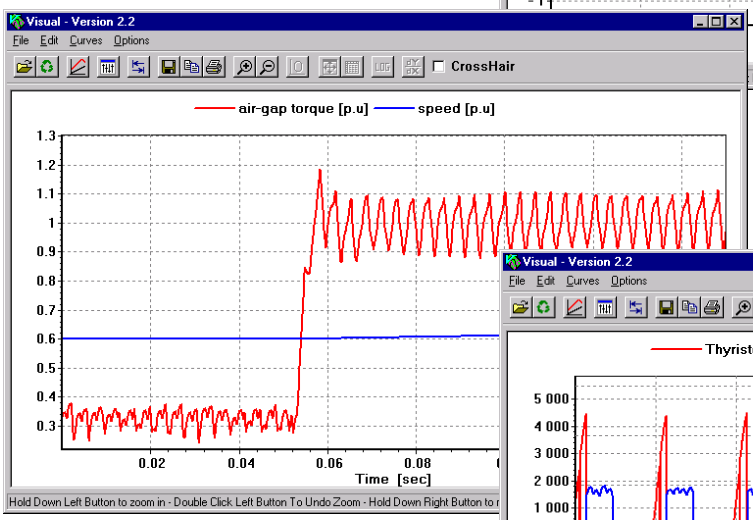

The 6-phase synchronous machine model has been especially developed for such kind of drives using 12-pulse converters.

Results have been compared successfully with a real 20 MW drive. The displayed curves presents the stator currents and the field current, the air-gap torque and motor speed, the voltage and current on a thyristor valve.

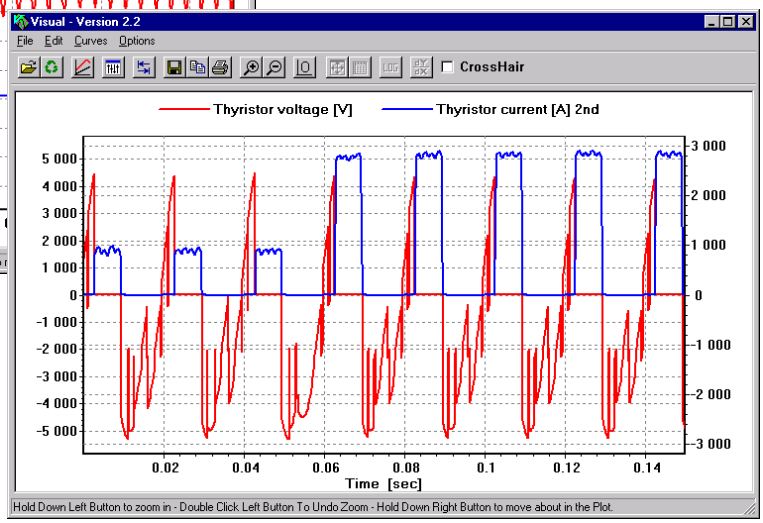

SIMSEN-Electro: STATCOM (STATic COMpensator)

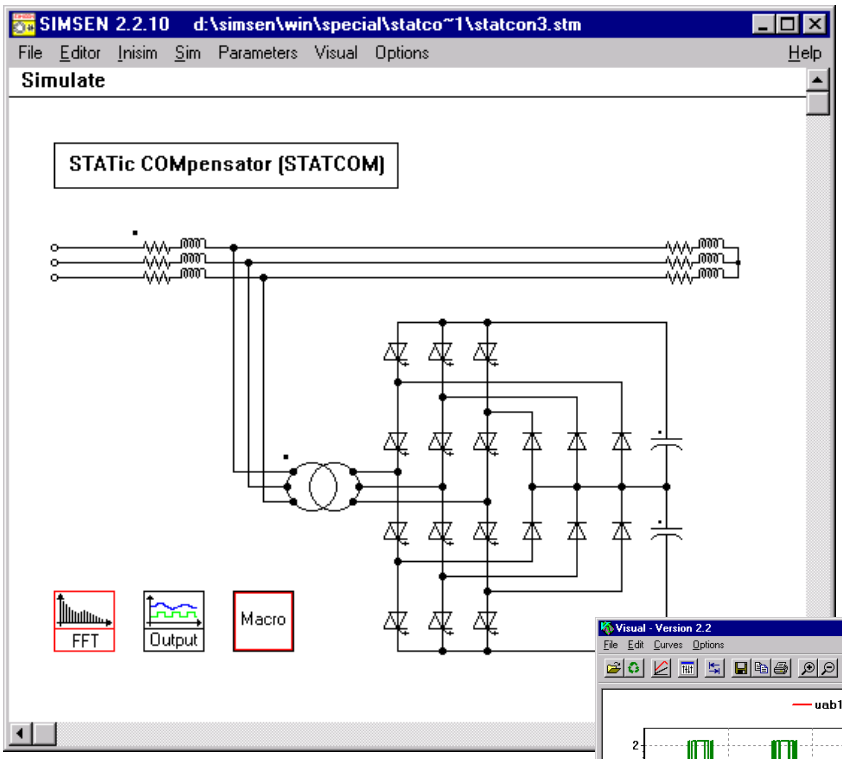

This example presents a FACTS (Flexible Alternative Current Transmission Systems) based on a three-level VSI (Voltage Source Inverter) working as a Static Var Compensator (SVC). The goal of such a system is to provide reactive power to a high voltage transmission line in order to keep its voltage level to a specified value. The advantage of the three-level VSI is the reduction of its output current harmonics without increasing the switching frequency of the valves (Thyristors GTO or IGCT, Integrated Gate Control Thyristor).

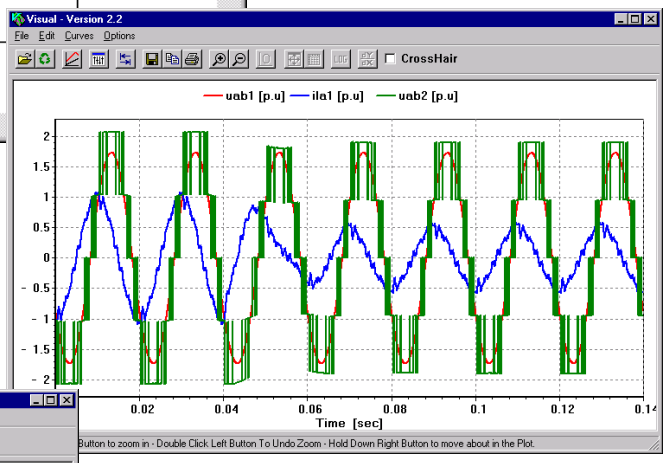

To achieve these performances, an efficient regulation part has been implemented. It contains a PLL (Phase Locked Loop), a special control with high modulation index, a reduced switching frequency of the valves with high frequency carrier signal and PWM (Pulse Width Modulation) control.

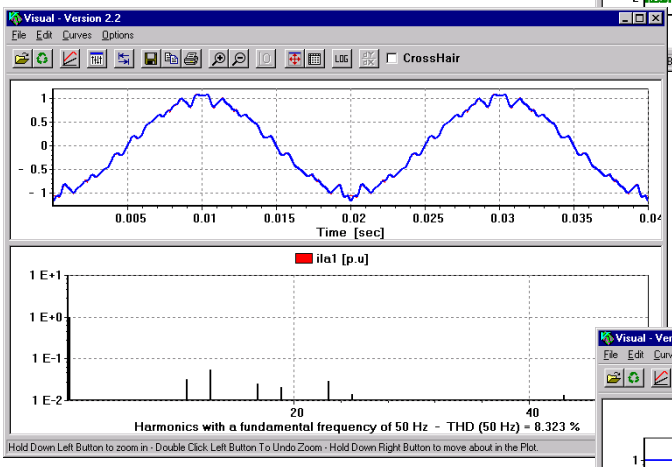

SIMSEN is able to take into account the real topology of a FACTS device with all the semiconductors. This provides the user with a detailed analysis of his system. The ON-LINE FFT has been applied to the transformer line current. Its results have been compared successfully with the harmonics analysis.

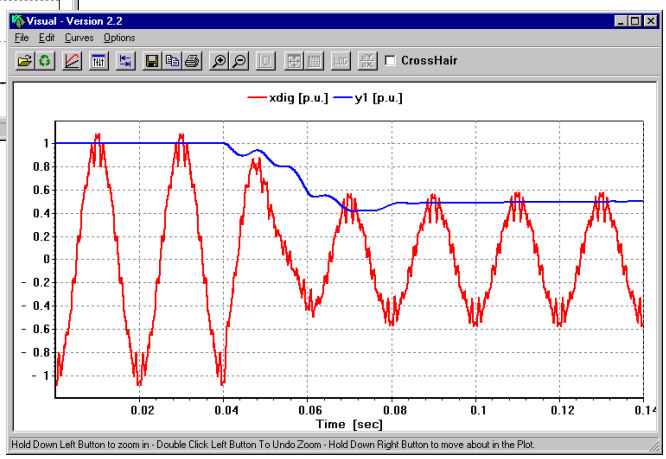

The user may implement and investigate several control methods in order to compare the results. Once the VSI has been successfully implemented and checked, the studied system may be extended with network elements (machines, lines, transformers, a.s.o) to investigate in details the behavior of FACTS devices in a high voltage AC network. ***SIMSEN*** is able to simulate large networks.

SIMSEN-Electro: Multilevel Voltage Source Inverter

This example presents a multi level Voltage Source Inverter (VSI) supplying an induction motor. For medium voltage drive applications, the proposed topology has the advantage of reducing the voltage harmonics on the motor using a multi level inverter. Each cell of the inverter is supplied by a small DC voltage. It is possible with the series connected cells to provide the motor with the desired phase voltage. The only inconvenient is the input supply transformer that needs many secondary windings as shown on the figure. This transformer has been modeled in details with linked inductors taking into account the special phase shifting angle of each secondary winding as well as the short circuit reactance of the transformer. This example demonstrates that ***SIMSEN*** can master a large number of semiconductors

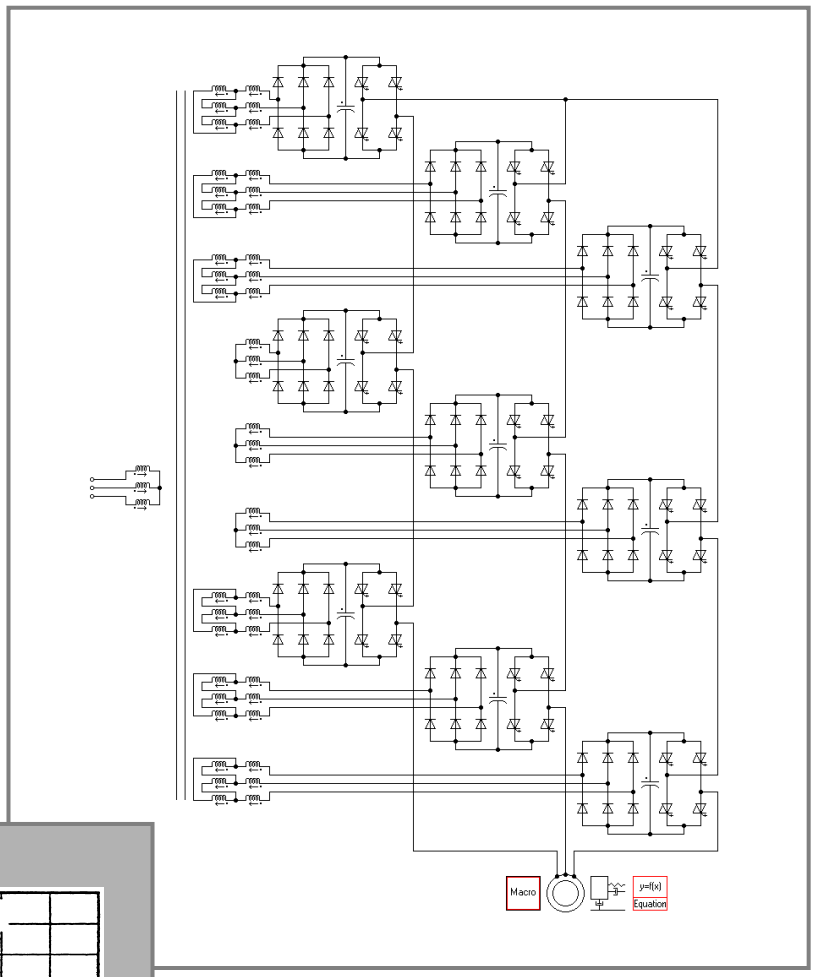

Measurements

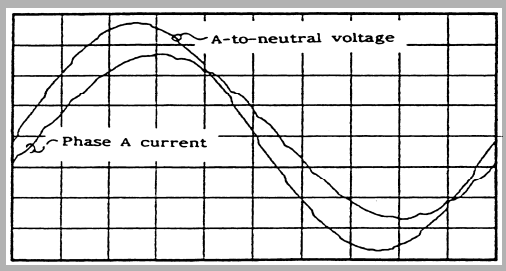

Measurements

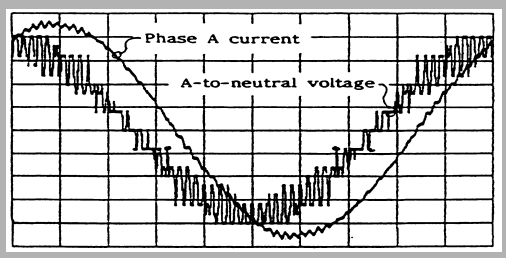

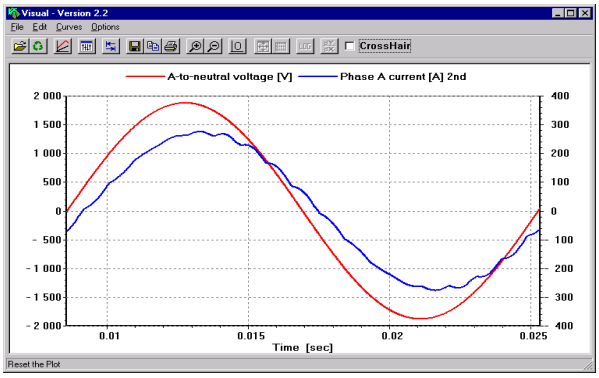

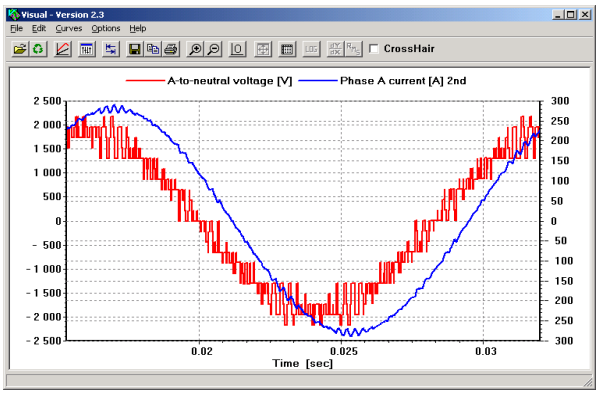

Figures show experimental results (black) and simulation results (color). One may notice the 18 pulse behavior on the input of the drive due to the special transformer. The control applied is based on PWM control with shifted carrier signals.

SIMSEN-*Electro*: 3-level UPFC (Unified Power Flow Controller)

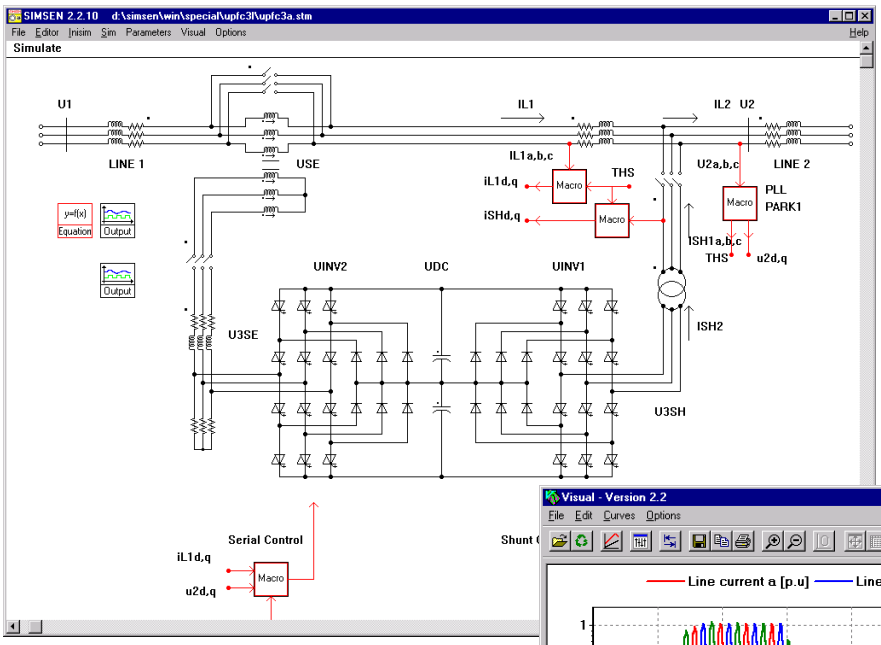

This example presents a 3-level UPFC (Unified Power Flow Controller). It concists of two 3-level VSI (Voltage Source Inverter) connected to the same DC-link. The first VSI is shunt connected to the AC bus. It works like a STATCOM in order to maintain the voltage on the AC node. The second VSI is serial connected to the transmission line. It can insert a regulated serial voltage in the transmission line.

Inserting this serial voltage in the transmission line, it is possible to modify the relative impedance of the transmission line, and thus to require the transmitted active and reactive power independently. The AC bus voltage maintain is also a great advantage of the UPFC.

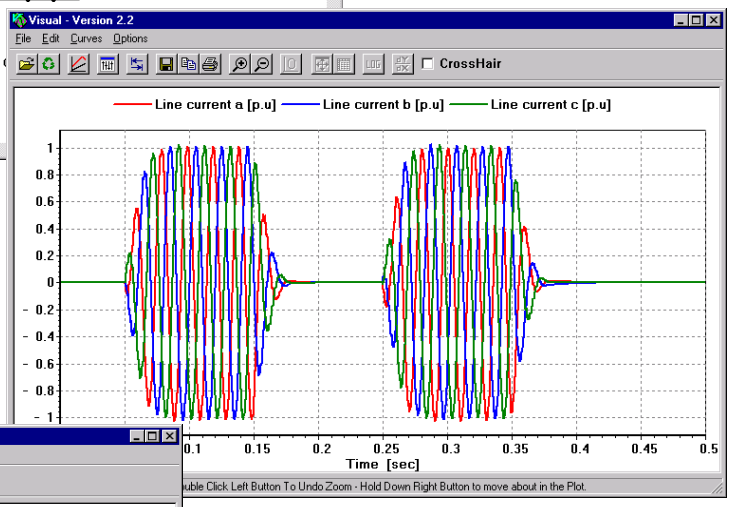

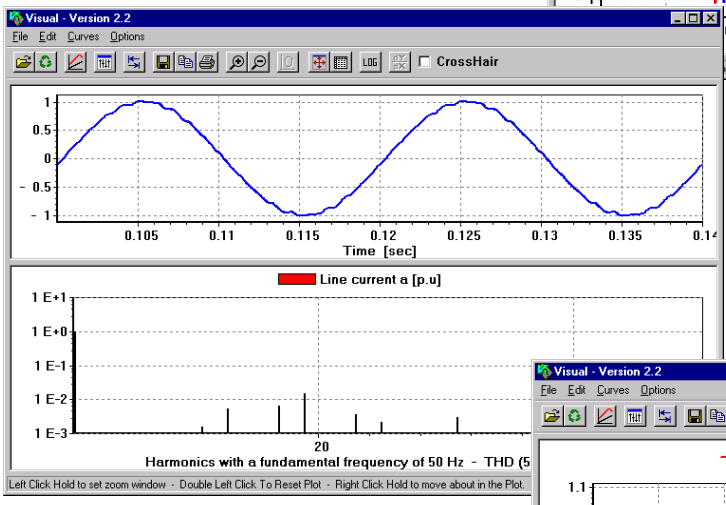

The curves represent a step response of active and reactive power in the transmission line. It is impressive to observe the high dynamic of the regulation even in such a case of high power UPFC (160 MVA, 6 kV DC, 50 Hz). The current in the transmission line contains only few harmonics (THD < 2%).

Again, this example shows the potential of ***SIMSEN*** to simulate in details power systems including power electronics devices. Such power network studies are going to be more and more important in the future. It is essential to take into account the power elements with three-phase modeling and the complete regulation in order to perform a right harmonics analysis.

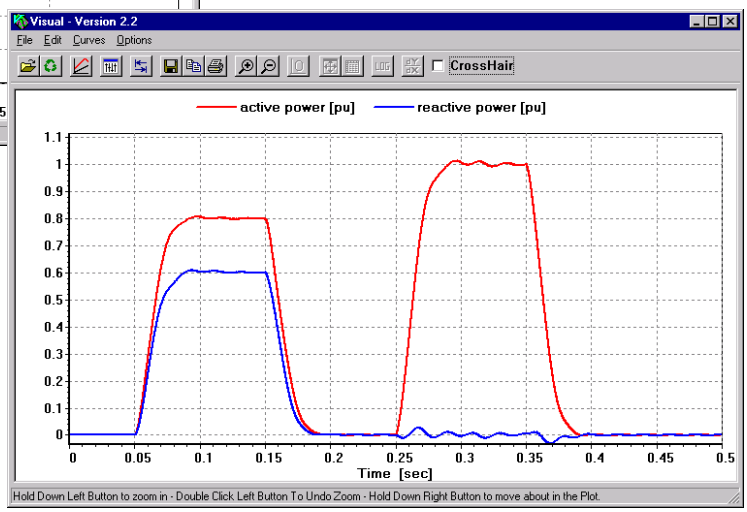

SIMSEN-Electro: Doubly-fed induction motor/generator with 3-level VSI

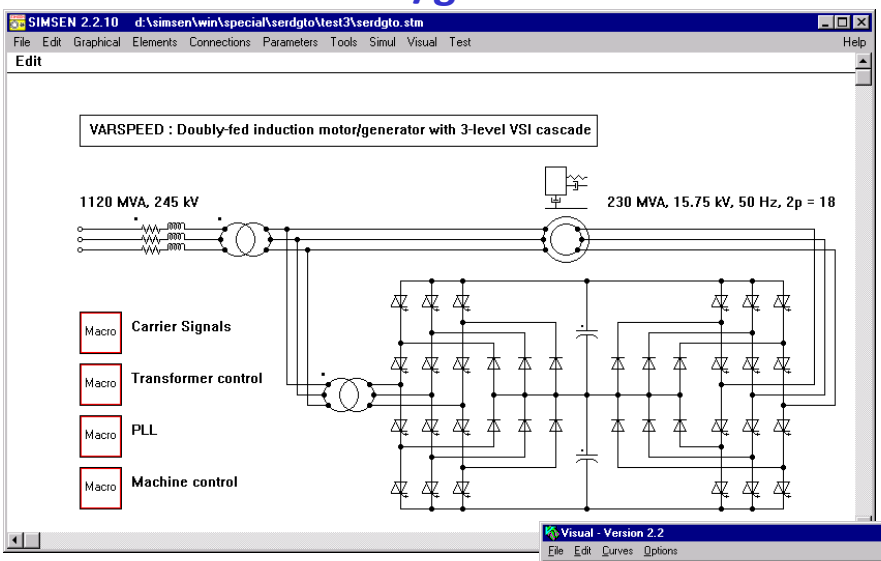

This example presents a Doubly-fed Asynchronous Machine (DASM). The rotor cascade is made of 2 3-level Voltage Source Inverter (VSI) for large pump storage plants. In comparison with the standard cyclo-converter cascade, the VSI cascade represents many advanta-ges: less power components, harmonics reduction, high dynamic and reactive power compensation.

The whole power circuit as well as the complete regulation part have been implemented in ***SIMSEN***. The control part includes the transformer control: exchange of active and reactive power, the machine control: speed regulation, stator and rotor current controls and the DC-link voltages control. Both VSI are tuned with improved PWM shape.

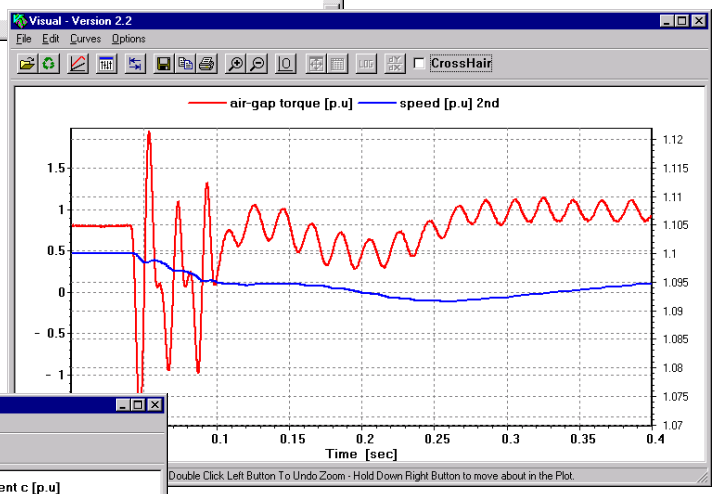

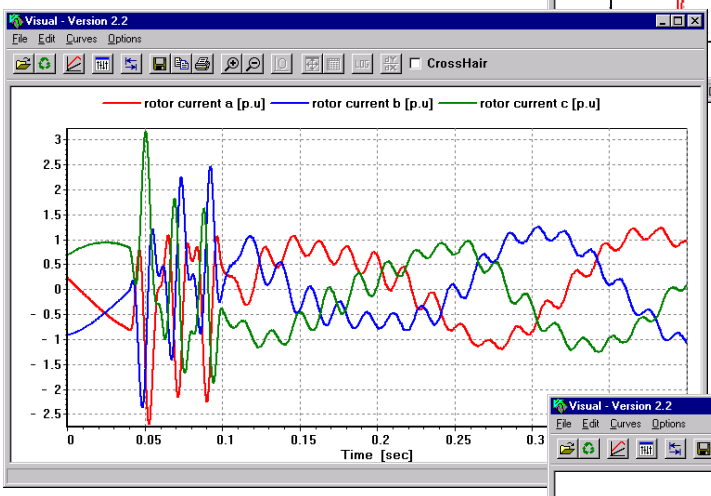

The simulation results present the behavior of the system after a 100% single phase voltage drop at the high voltage side of the main transformer. ***SIMSEN*** appeared to be a powerful simulation system, especially when reconnecting the cascade transformer to the AC grid. This allows to estimate correctly the global power plant current.

Another important point of the control is the respect of the switching frequency limit of the new hard-driven GTO's. This has been taken into account in the control. Swithing frequencies of 250 Hz on the transformer side (see beside figure) and 500 Hz on the rotor side have been required. Even with these low switching frequency values, the calculated THD of both stator and main transformer currents lead to values lower than 1%.

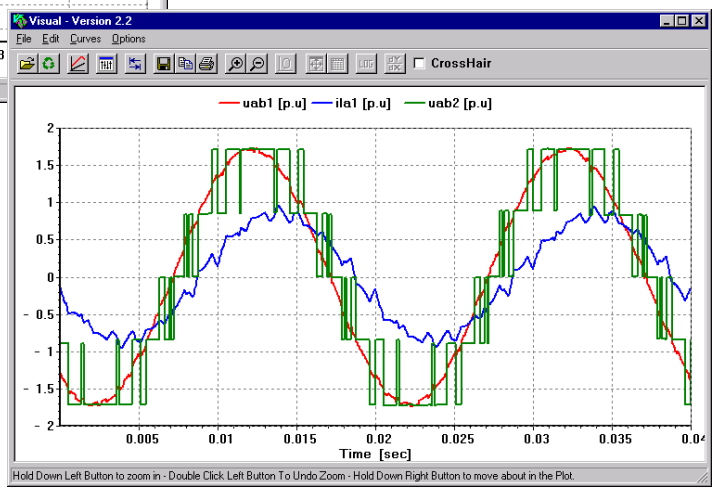

SIMSEN-Electro: Synchronous motor fed by a 12-pulse cyclo-converter

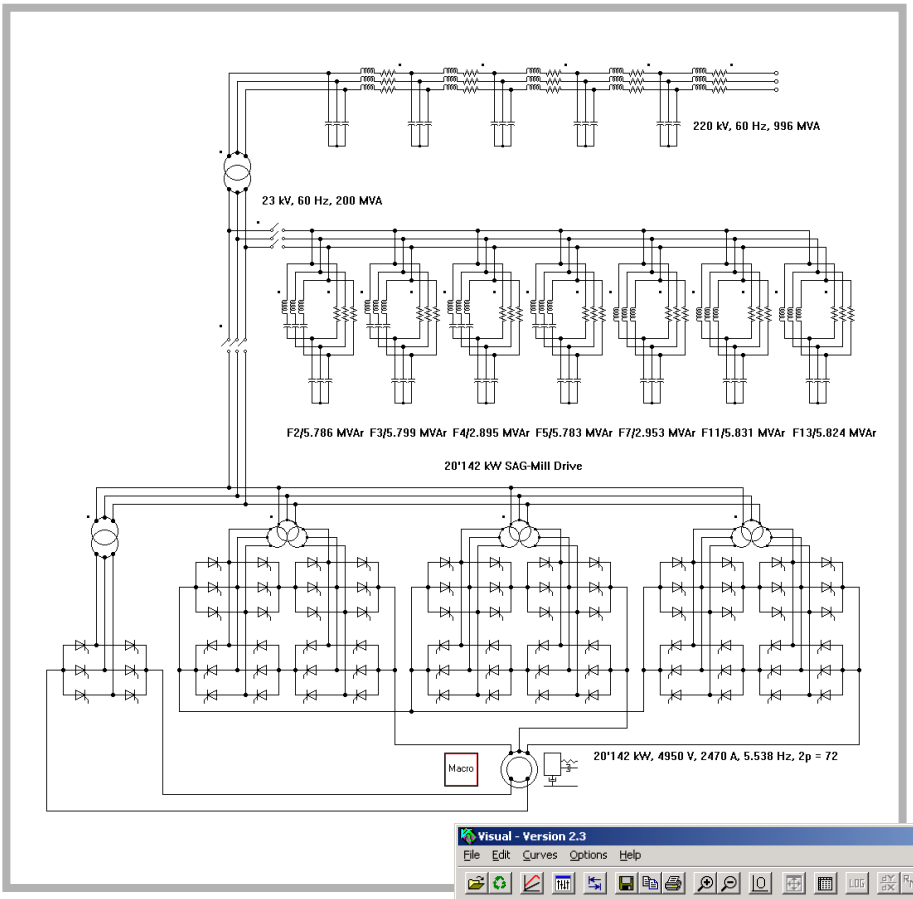

This example presents a synchronous motor fed by a 12-pulse cyclo-converter. The circuit includes a long trans-mission line as well as the harmonics filters bank. It is possible to analyze the line-filter interaction. The 12-pulse cyclo-converter is com-mutated by the AC network. Each DC-link supplies a phase of the synchronous motor. The field current rectifier is also taken into account. The control scheme is based on a dynamic flux model of the synchro-nous machine. It allows a very high dynamic, even if that kind of drive has a very low supply frequency.

The simulation results present the behavior of the system in steady-state at rated operating point as well as a load change from 50% to 100% at rated speed. ***SIMSEN*** is able to simulate such a complex topology, including more than 210 differential equations. Values rela-ted to each semiconductor can be displayed.

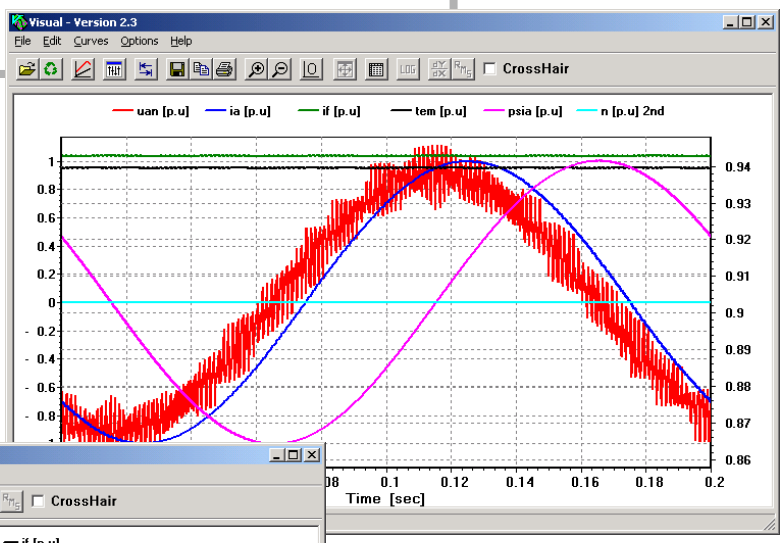

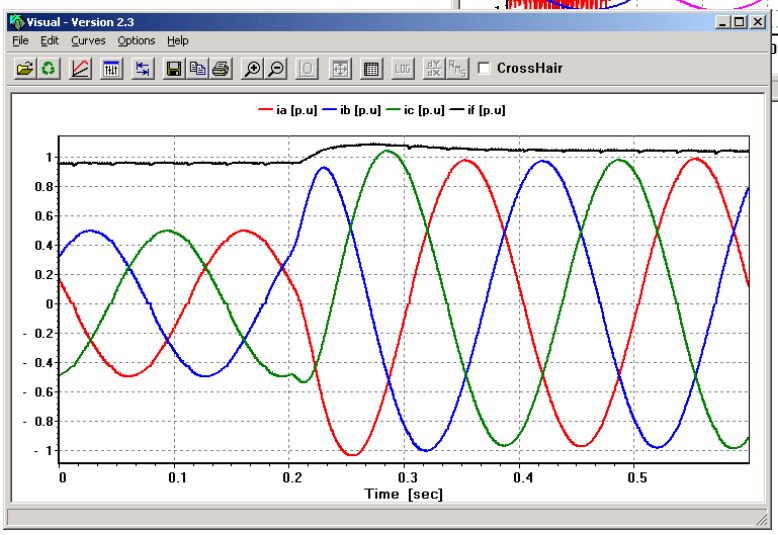

Netwok quantities are also available (active and reactive power, current harmonics, aso…). The great advantage of ***SIMSEN*** in that kind of example is the possibility to analyze a large power system taking into account all the semiconductors. The influence of each power electronics element can be estimated. This feature is a powerful advantage to analyze the power systems of the future, including more and more power electronics.

SIMSEN-Electro: Induction motor fed by current converter

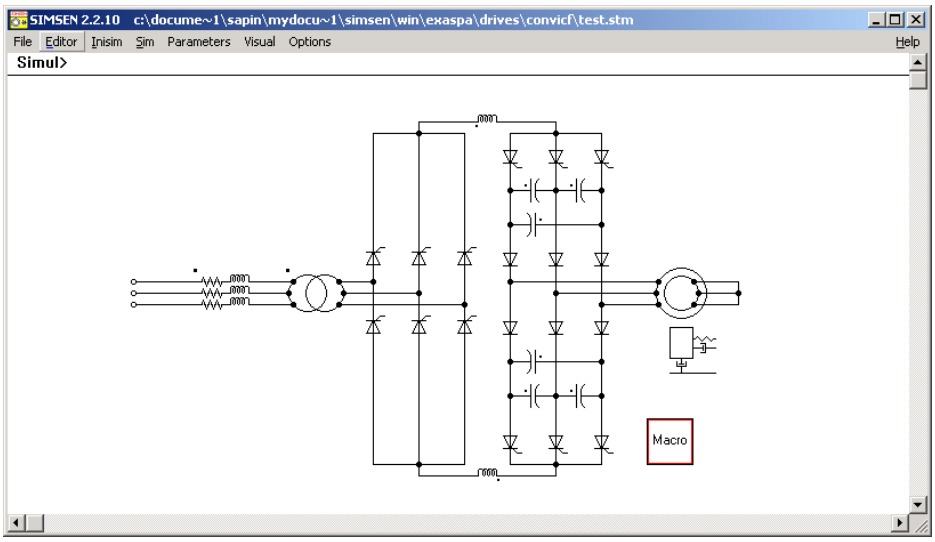

This example presents an induction motor fed by a current converter. This is a special frequency converter including additional capacitors in order to extinguish the current of the thyristors. This leads to very fast transients and to the typical form of terminal voltages on the motor side. To validate the accuracy of ***SIMSEN***, measurements have been recorded on a real 280 kW drive.

The results present the behavior of the system in steady-state at 97% of the rated operating point. The red curves correspond to the ***SIMSEN*** computed results and the blue curves to the measurements. On the right side, the terminal voltage of the motor is displayed. Due to the presence of the extinguishing capacitors, the voltage presents peaks during each commutation. The simulation matches the measurements.

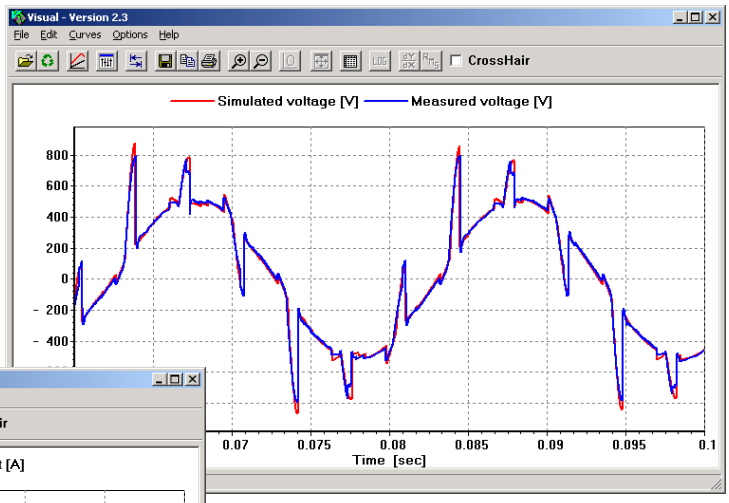

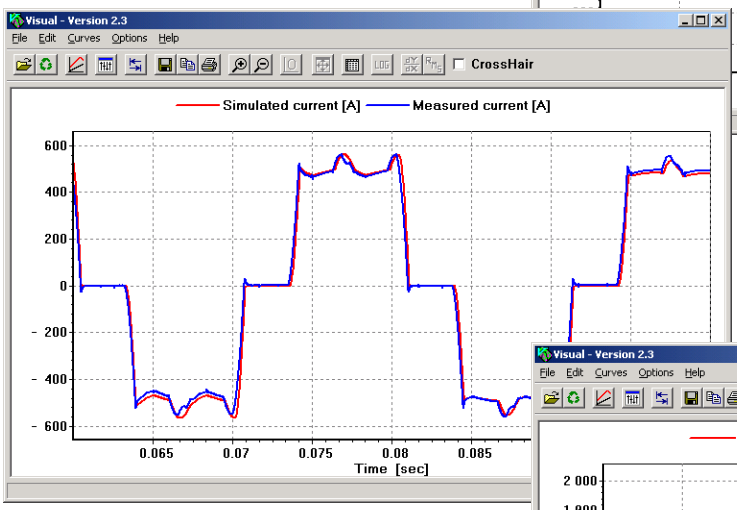

On the left side, the phase currents of the motor are displayed. They present the typical 120° wave form of the current converter. This kind of drive is very sensitive to the DC link reactor. It is responsible for the stability of the drive.

On the right side, the air-gap torque is displayed. It has been measured through a digital torque measurement device. This device is based on electrical signals and allows measuring low and high fre-quencies components in the air-gap torque of electrical machines. The simulation results match the measurements. This example shows the precision of the modeling in ***SIMSEN***.

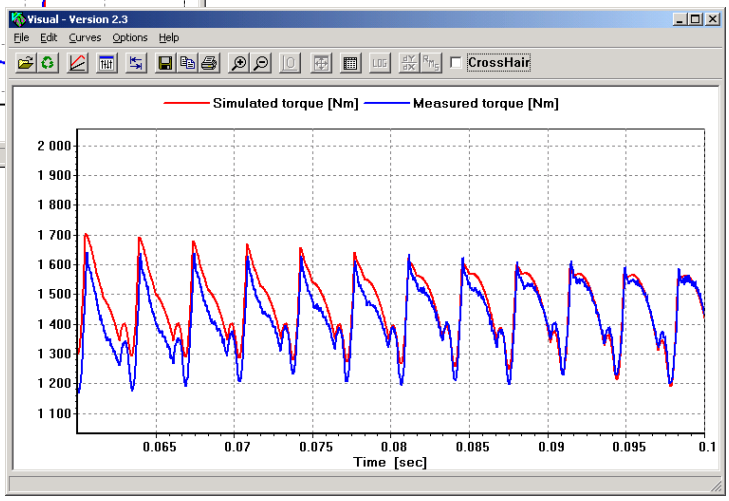

SIMSEN-Hydro: Validation

Example of Validation of *SIMSEN-Hydro* :

Pumped-Storage Plant (PSP) of 4x400 MW Francis pump-turbines:

- Simulation of emergency shutdown in Generating mode
- Simulation of emergency shutdown in Pumping mode

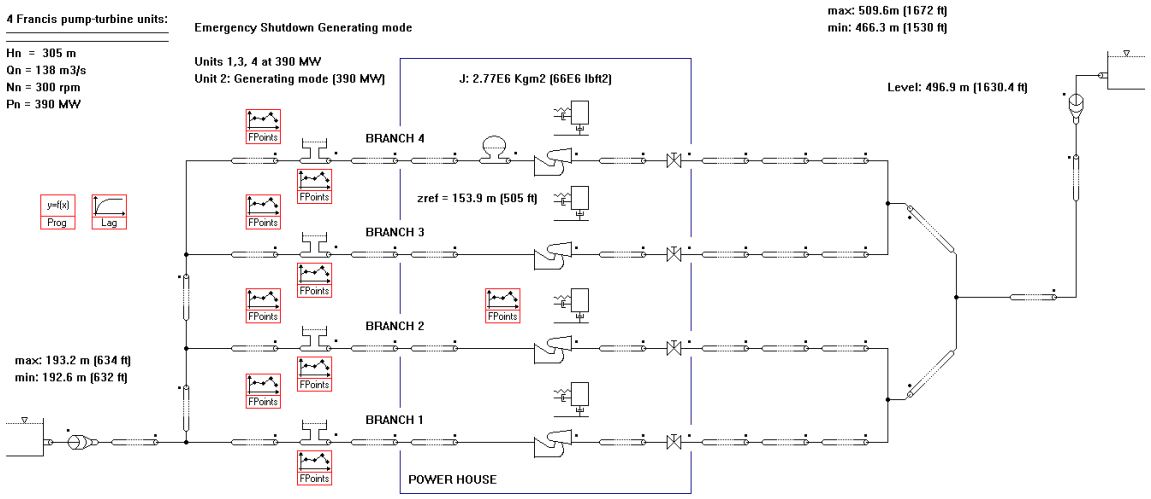

Load rejection in turbine and pump mode produces mass oscillations between downstream surge chambers and tailrace reservoir, (top), waterhammer effects in the draft tube, (middle), and in the penstock (bottom). Comparisons between experiments (black) and simulation results obtained with SIMSEN-Hydro (red) show good agreements for both operating mode: generating and pumping mode. The simulation also provides runaway speed of the units.

Turbine mode **Pump mode**

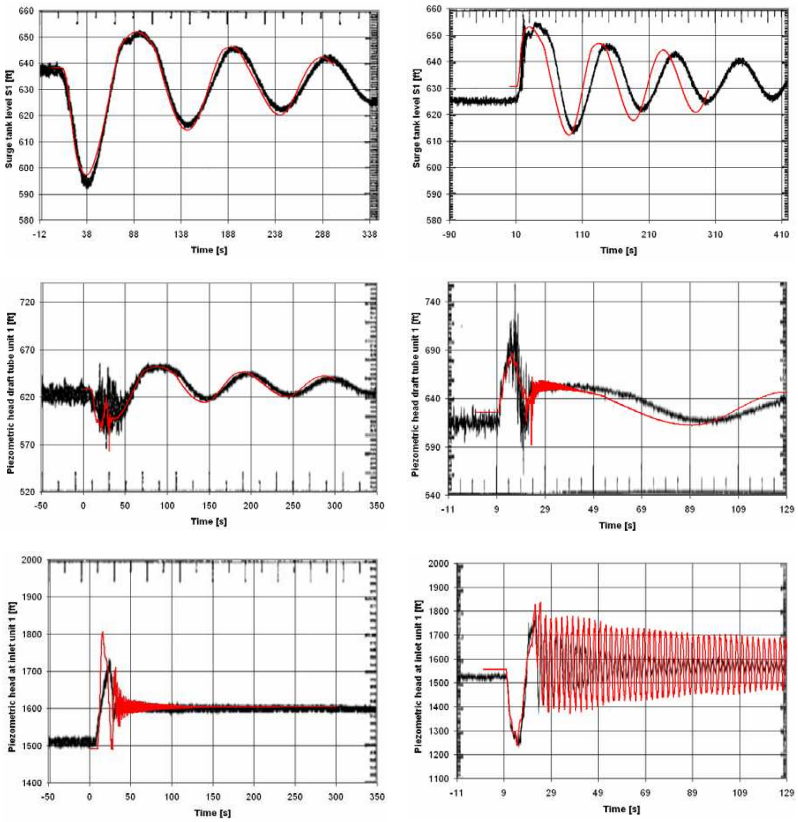

SIMSEN-Hydro: Hydroelectric transients

Example with *SIMSEN-Hydro* :

Tripping of a 200 MW consumer load in an islanded power network comprising:

- 1 GW Hydroelectric power plant including 4x250 MW Francis turbines, long penstock and surge tank
- 1 to 4 thermal power plants of 1.3 GW including, high pressure, 2 low pressure steam turbines
- Passive consumer loads
- Transmission line of 400 kV

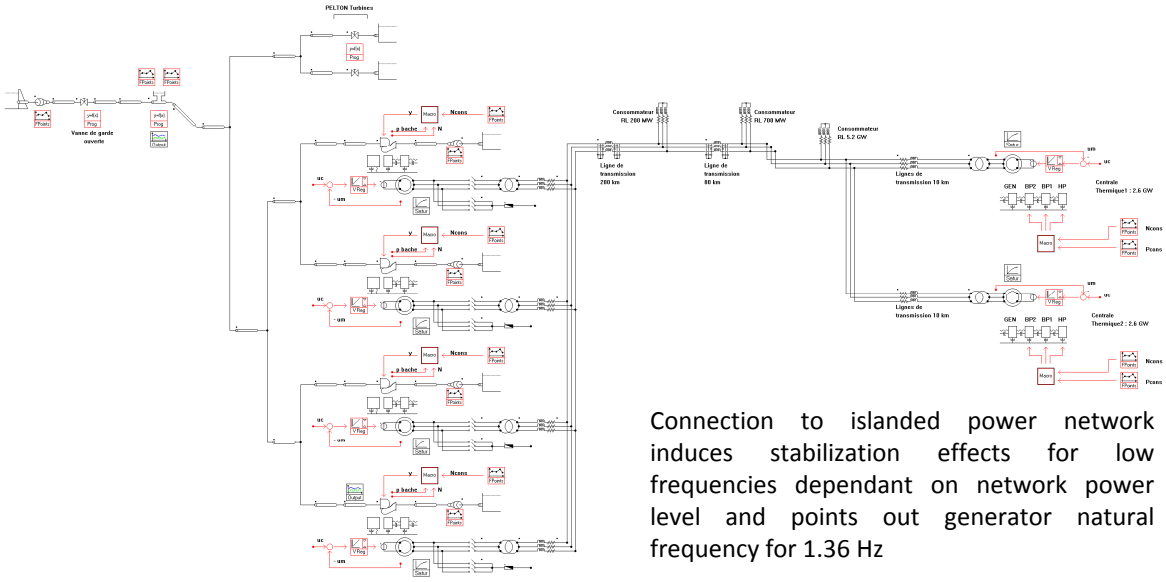

Connection to islanded power network induces stabilization effects for low frequencies dependant on network power level and points out generator natural frequency for 1.36 Hz

• Turbine transfer function without connection to the islanded power network

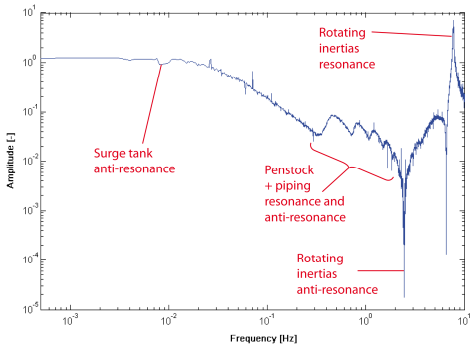

• Turbine transfer function with connection to the islanded power network

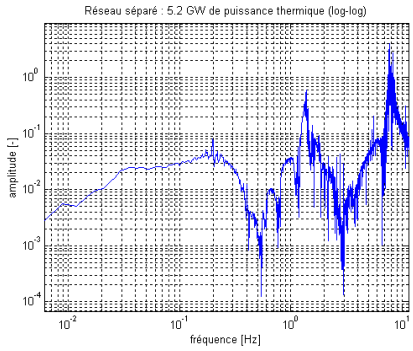

• Unstable operation when the generator natural frequency is not considered for the turbine speed governor parameters selection

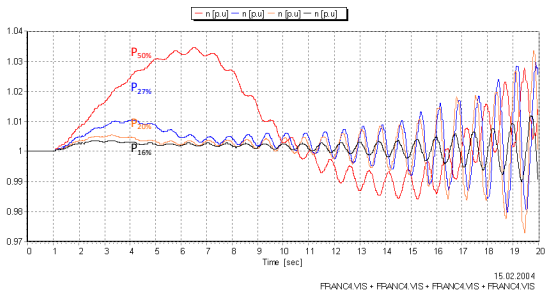

• and stable operation when considered, with influence of network power level

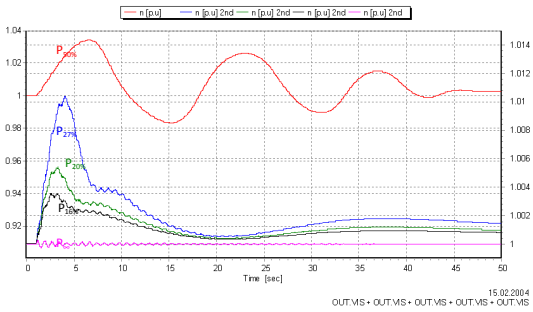

SIMSEN-Hydro: Hydroelectric transients with Power System Stabilizers (PSS)

Example with *SIMSEN-Hydro* :

Tripping of a 200 MW consumer load in an islanded power network comprising:

- 1 GW Hydroelectric power plant including 4x250 MW Francis turbines, long penstock and surge tank
- 1 to 4 thermal power plants of 1.3 GW including, high pressure, 2 low pressure steam turbines
- Passive consumer loads
- Transmission line of 400 kV

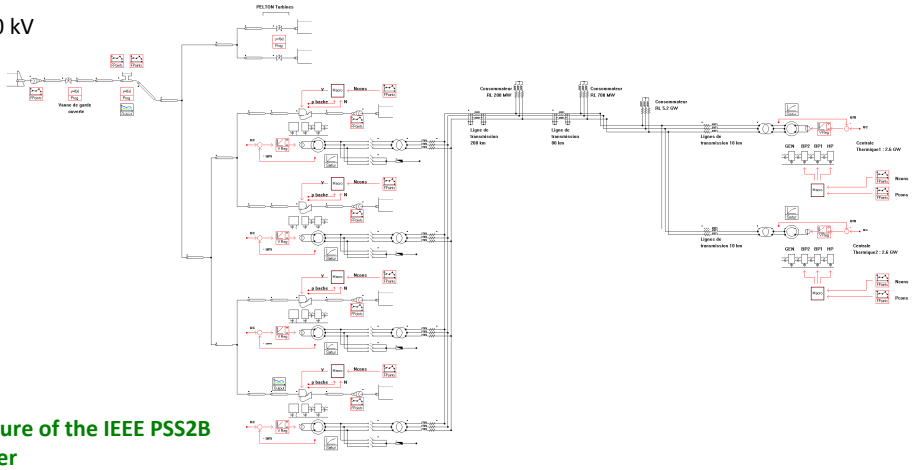

• Block diagram structure of the IEEE PSS2B Power System Stabilizer

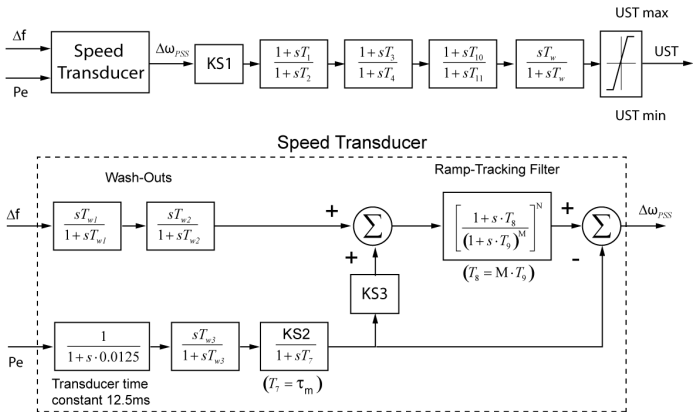

Speed deviations and power oscillations can be considerably reduced using Power System Stabilizers, PSS.

The IEEE PSS2B has for inlet values the network frequency deviation and the electrical active power, the output value is a correction of the voltage regulator set point.

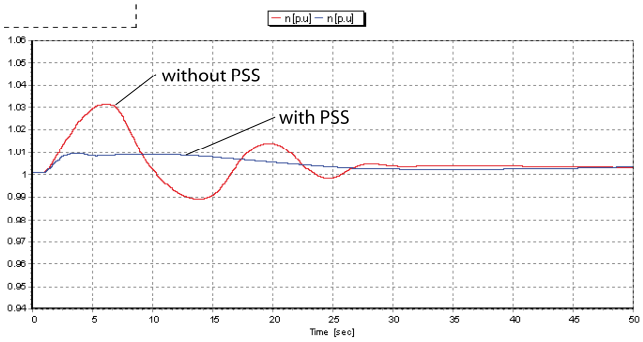

• Stabilization of active power with and without PSS

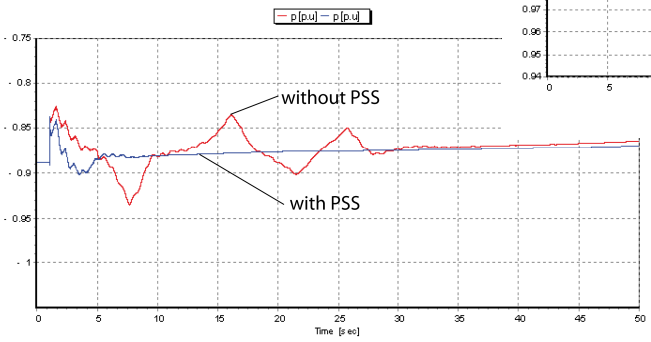

• Reduction of speed deviation obtained with Power System Stabilizer IEEE PSS2B

SIMSEN-Hydro: Power plant full load instabilities

Hydroelectric example with *SIMSEN-Hydro* :

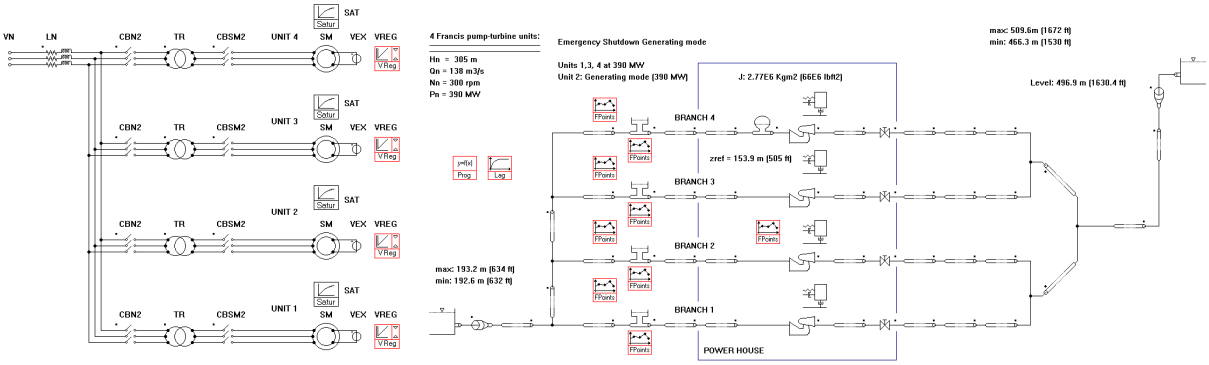

Power plant model including:

- penstock
- 4 x 400 MW Francis pump-turbines
- full load vortex rope model
- downstream surge chambers
- tailrace tunnel
- rotating inertias
- synchronous generators
- transformers
- infinite network
- voltage regulators

Investigation:

Full load instabilities in generating mode are induced on unit 4 by the shutdown of the unit 2 which decreases downstream water level, and thus the cavitation number.

Indeed, non-linear behavior of the cavitation vortex rope compliance is taken into account for this investigation enabling the explanation of instabilities onset for this pumped-storage plant.

Pressure fluctuations in spiral case and draft tube, as well as characteristics frequencies are well simulated.

• Full load vortex rope modeled by cavitation compliance C and mass flow gain factor C

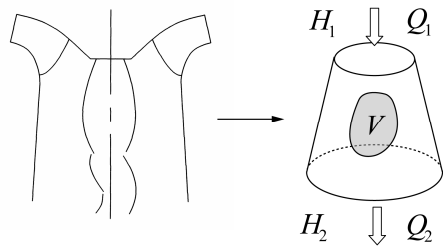

$$Q_1 - Q_2 = C \cdot \frac{dH_2}{dt} + \chi \cdot \frac{dQ_2}{dt}$$

• Pressure fluctuations at unit 4 spiral casing and draft tube

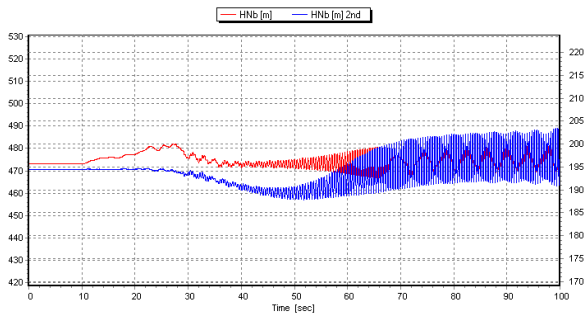

• Unit 2 normal shutdown

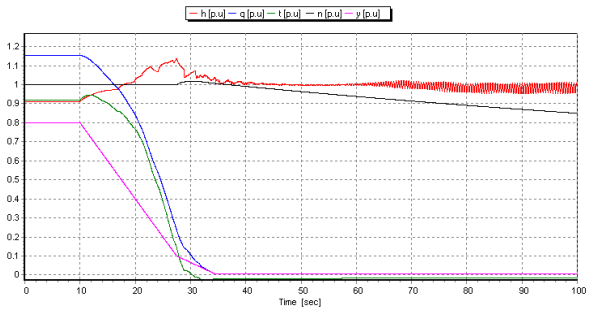

• Active and reactive power of unit 4

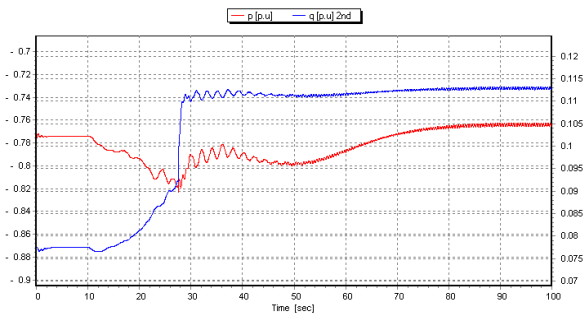

SIMSEN-Hydro: Pumped-Storage Plant

Hydraulic transient of complex pumped-storage plant with *SIMSEN-Hydro* :

Power plant model including:

- 2 reservoirs
- 2 galleries
- 2 surge chambers
- 2 penstocks
- 3 x 25 MW Pelton Units
- 1 x 25 MW pump
- 1 x Siphon pump

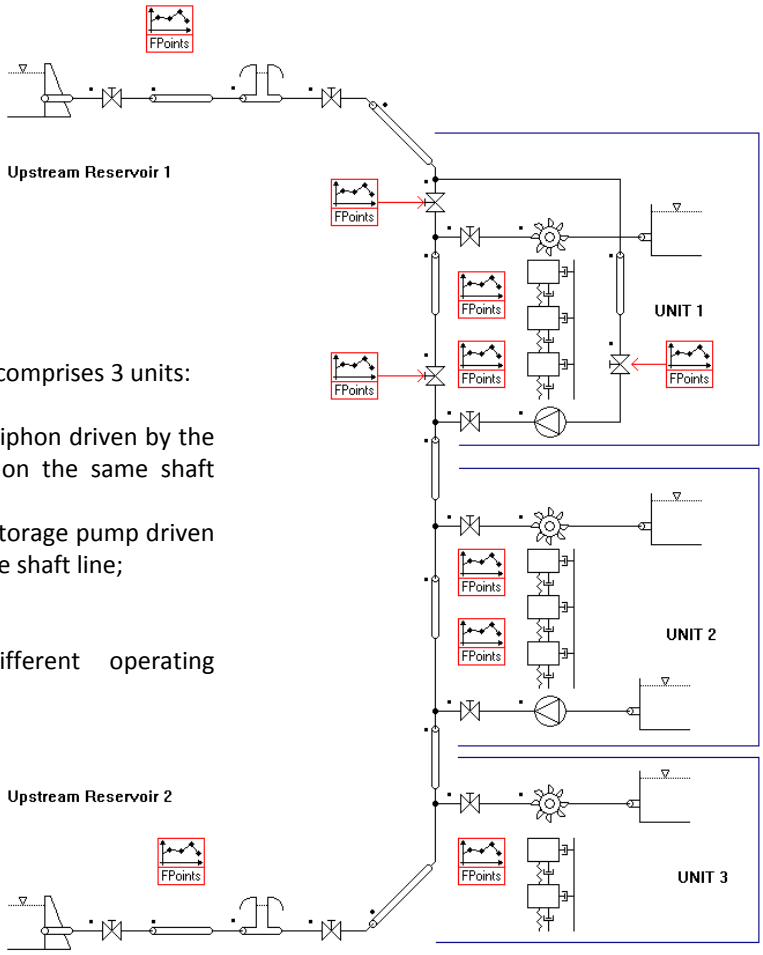

Investigation:

The pumped-storage power plant comprises 3 units:

- **Unit 1:** with Pelton turbine and siphon driven by the same synchronous generator all on the same shaft line;
- **Unit 2:** with Pelton turbine and storage pump driven by the same generator on the same shaft line;
- **Unit 3:** with Pelton turbine only.

There is more than 60 different operating configurations.

Thus, complex emergency shutdown procedures in turbine and pump modes are simulated to define maximum power plant solicitations.

• Discharge in Pelton turbine and Pump of Unit 2 and Siphon pump during pump emergency shutdown with Pelton nozzle openings to avoid reverse pumping

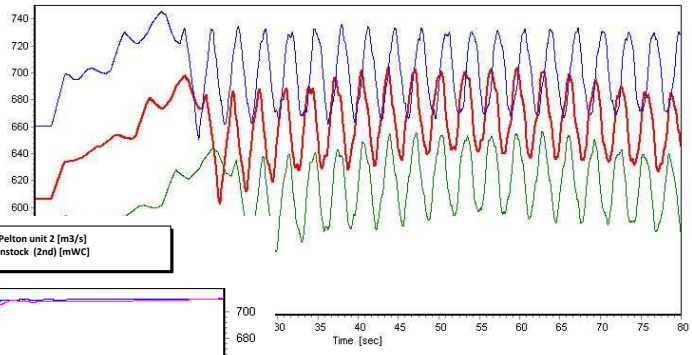

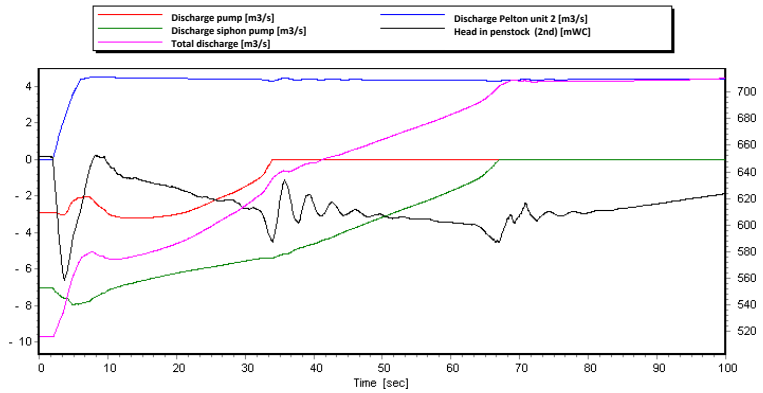

• Penstock head for different reservoir water level settings resulting from 3 units emergency shutdown

SIMSEN-Hydro: Hydraulic test rig resonance

Example of Validation of *SIMSEN-Hydro* :

Modelling of Francis turbine scaled model test rig with SIMSEN-Hydro to explain vortex rope induced resonance of the hydraulic circuit.

The closed loop test rig model includes the model of the downstream tank, the parallel pumps, the piping system, the turbine and the draft tube.

The draft tube model is modeled with 2 pipes and a pressure source. Free and forced oscillations are preformed.

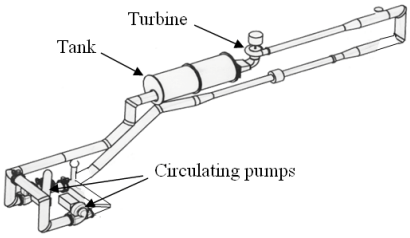

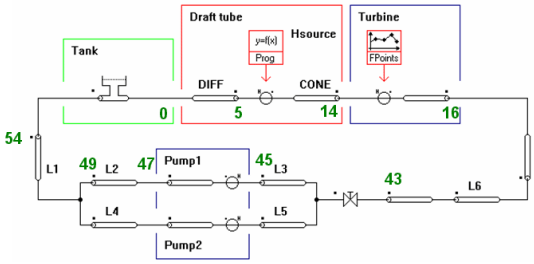

• **Free oscillation analysis: based on PRBS excitation (PRBS: Pseudo Random binary Sequence)**

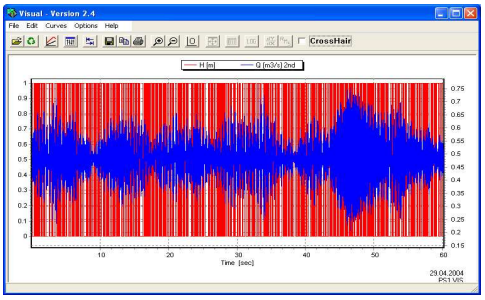

• **Forced response analysis: Pressure source excitation modeling vortex rope excitation**

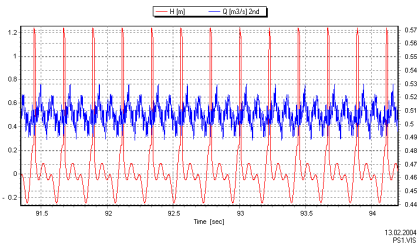

• **Water fall diagram of the pressure pulsations resulting from free oscillation analysis**

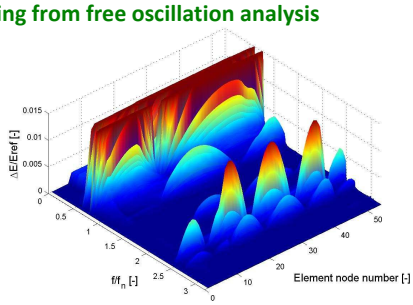

• **Water fall diagram of the pressure pulsations resulting from forced oscillation analysis**

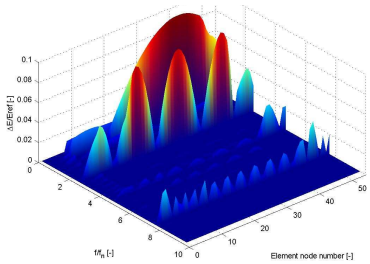

• **Comparison of pressure amplitude spectra at pressure source and turbine cone in the case of forced response analysis showing good agreements for the characteristic frequencies**

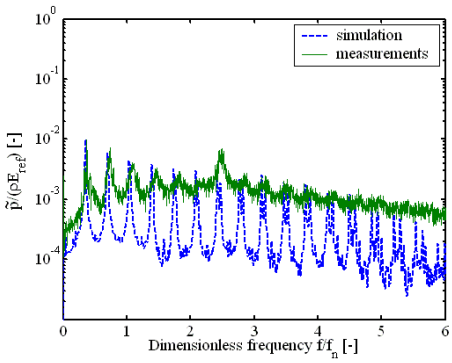

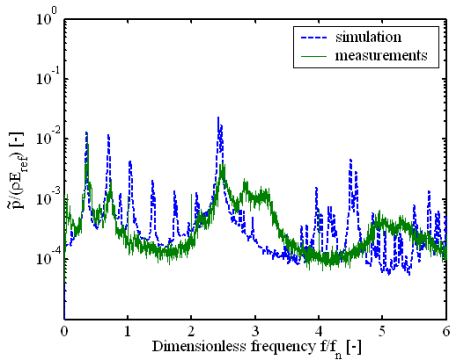

SIMSEN-Hydro: Transient of Variable Speed Pump-Turbine Unit

Transient of variable speed pump-turbine with *SIMSEN-Hydro* :

A 2x320 MW Pumped-Storage plant is modeled with SIMSEN and includes:
- Hydraulic circuit
- Pump-turbine
- Doubly Fed Induction Generator (DFIG) with 3 levels Voltage Source Inverter (VSI)
- Infinite power network

Variable speed advantages:
- Possibility of active power control in pumping mode
- Efficiency increase and wide range of operation in generating mode especially under partial load
- Network stability improvement by reactive power control
- Network stability improvement by instantaneous power injection in the grid « Flywheel Effect»
- Starting of the group in pumping mode without supplementary equipment

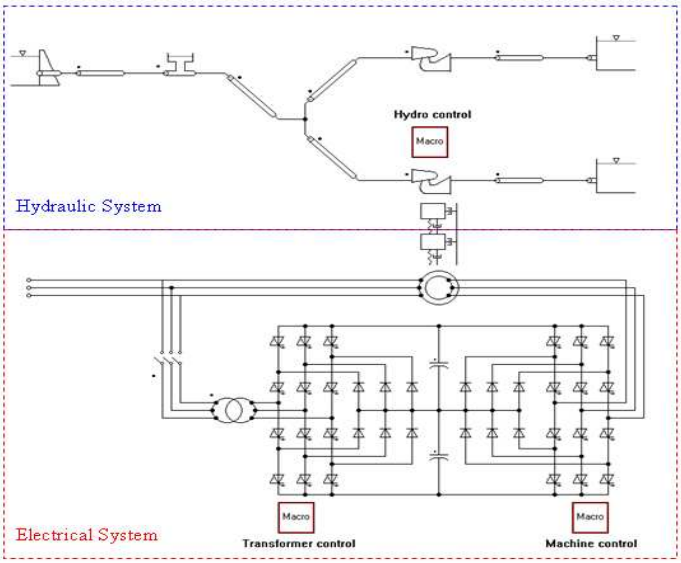

• 2x320MW Variable Speed Pump-Turbine Power Plant

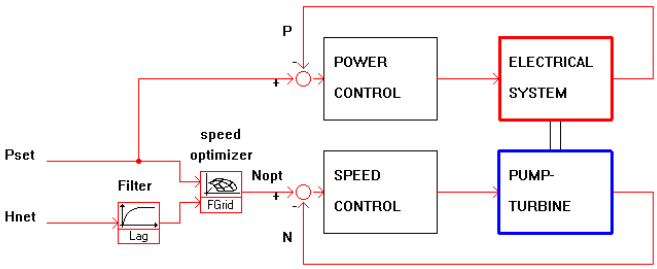

• Control strategy in turbine mode of operation

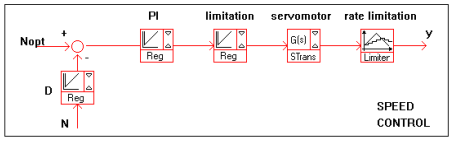

• Turbine speed governor

Turbine mode

Pumping mode

Fast active power adjustment

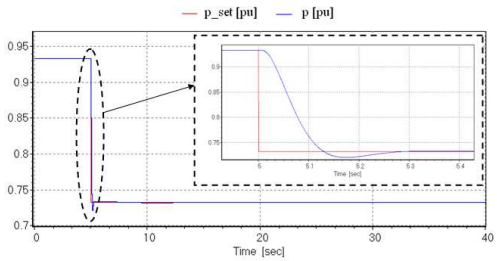

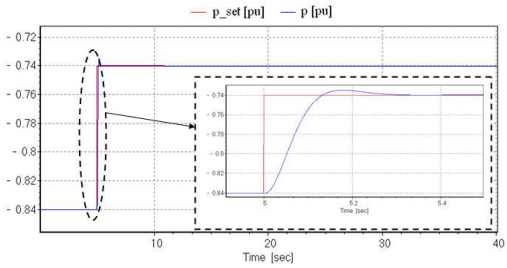

Pump-turbine transient

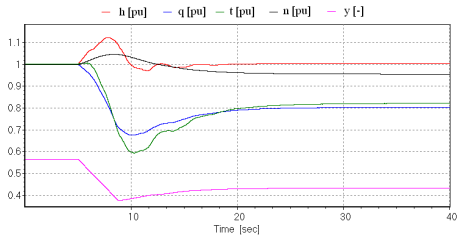

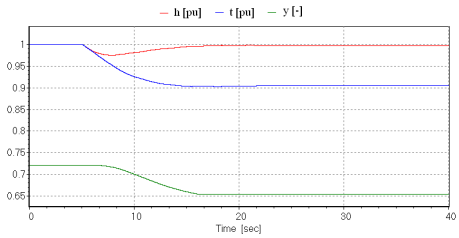

• Variable speed unit transient resulting from power setpoint change

SIMSEN-Hydro: Pumped-Storage Plant in Mixed Islanded Power Network

Modeling of mixed islanded power network with *SIMSEN-Hydro* :

A mixed islanded power network is modeled with SIMSEN and includes:
- 2x250 MW Pumped-Storage plant
- 100x2 MW = 200 MW Wind Farm
- 1300 MW Thermal Power Plant
- Passive consumer load.

Pumped-Storage Plant model

The Pumped-storage plant is made of:
- upstream reservoir;
- gallery;
- penstock;
- 3 type-machine unit with Francis turbine, generator, fluid coupling and pump on the same shaft line (3 inertias model);
- tailrace water tunnel;

Thermal Power Plant model

The thermal power plant model includes:
- upstream steam pressurized tank;
- high pressure steam turbine;
- re-heater;
- 2 low pressure steam turbines;
- and a 4 inertias shaft line.

Wind Farm model

The Wind farm model is a 100x2 MW equivalent wind turbine model, comprising:
- wind model;
- shaft line model with shaft stiffness, turbine and generator inertias and gearbox ratio;

- the wind turbine energy transfer is modeled with a power coefficient Cp as function of the tip speed ratio and blade pitch angle.

• Pumped-Storage plant 2x250 MW with 3 type-machine arrangement

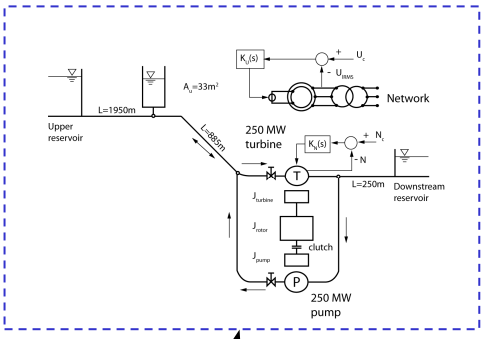

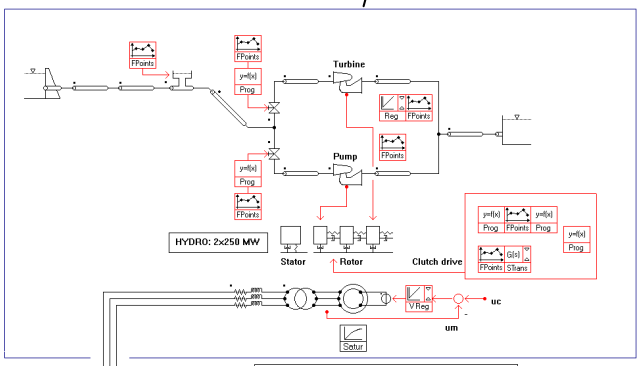

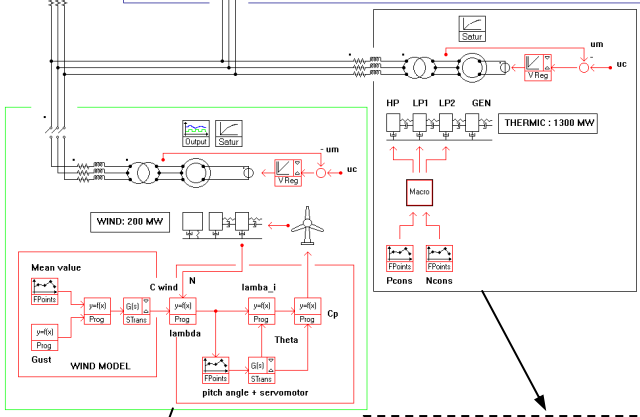

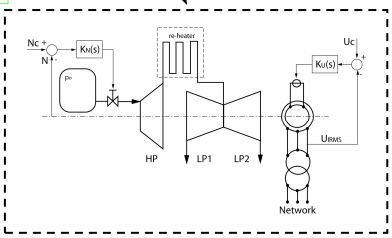

• Thermal power plant 1300 MW

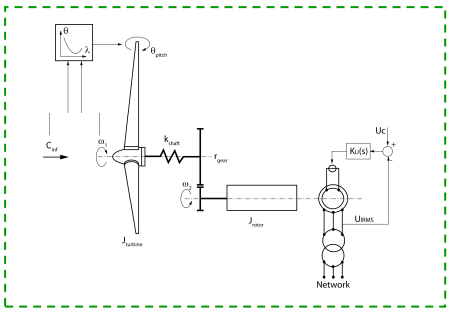

• 100 Wind turbines 2MW

SIMSEN-Hydro: Pumped-Storage Plant in Mixed Islanded Power Network

Transient of mixed islanded power network with *SIMSEN-Hydro* :

The 3 type machine unit enables:

- adjustable pump power by hydraulic short-circuit operation;
- rapid pump to turbine operating mode change-over because of same rotating direction of the pump and the turbine.

The pump to turbine change-over operation is simulated considering a wind farm shutdown due to wind over speed. The wind farm power loss is compensated by the pumped-storage plant.

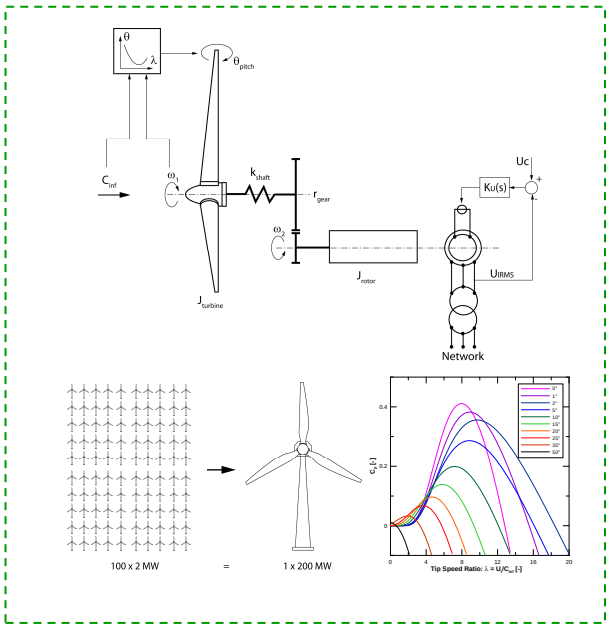

• Wind turbine transient during emergency shutdown due to over-speed wind (first, aerodynamic brake with stall control and then circuit beaker tripping):

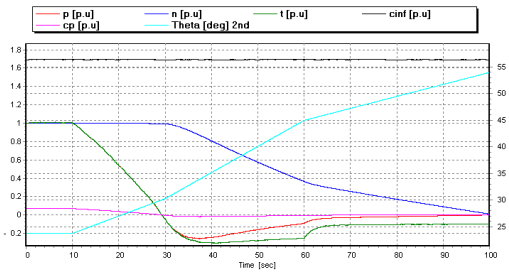

• Pump shutdown for operating mode change over with clutch decoupling:

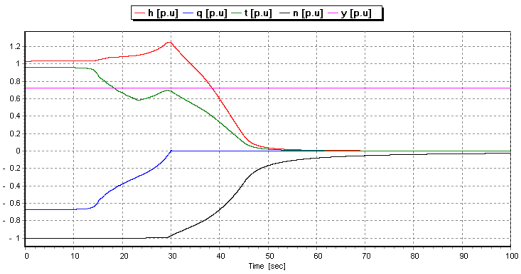

• Turbine transient with speed regulator to compensate Wind Farm power loss:

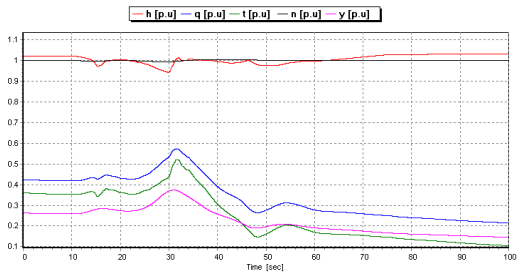

• The wind turbine power is given by:

$$P = \frac{1}{2}\rho \cdot Aref \cdot Cp \cdot C_{\inf}^{3}$$

• with the empirical expression of the power coefficient:

$$Cp(\lambda,\theta) = 0.5\left(\frac{116}{\lambda_i} - 0.4\theta - 5\right)\cdot e^{-21/\lambda_i}$$

• and with the tip speed ratio:

$$\lambda = \frac{U_t}{C_{\inf}} = \frac{D_{ref}\cdot\omega_1}{2\cdot C_{\inf}}$$

• and the parameter:

$$\lambda_i = \frac{1}{\dfrac{1}{\lambda + 0.08\theta} - \dfrac{0.035}{\theta^3 + 1}}$$

• Power generation during the transient:

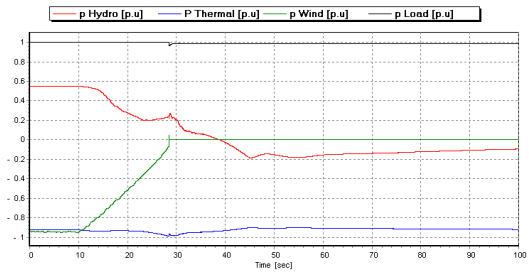

SIMSEN-Hydro: Coupling with CFD computation

Coupling of CFD simulation software with *SIMSEN-Hydro* :

Complex 3D unsteady hydrodynamic flows are computed using CFD simulation software such as ANSYS-CFX and coupled with SIMSEN hydroacoustic simulations of the hydraulic system

Cavitating vortex rope in Francis turbines:

- 3D unsteady multiphase flow developing in Francis turbine draft tube is simulated with ANSYS-CFX to deduce cavitation compliance and excitation source introduced in 1D SIMSEN simulation
- 1D Hydroacoustic hydraulic circuit flows is simulated in SIMSEN and resulting discharge and pressure level are transferred as new boundary conditions in 3D CFD computation

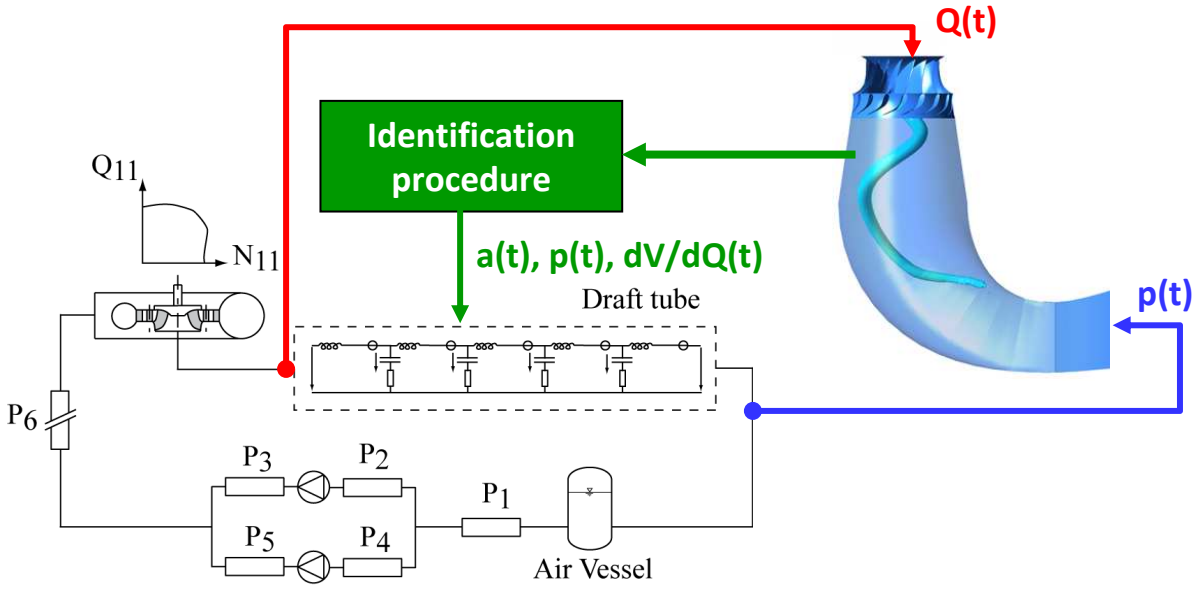

Von Karman vortices induced pipe resonance:

- 3D unsteady flow developing behind a bluff body in pipe is simulated with ANSYS-CFX to deduce pressure excitation source then introduced in 1D SIMSEN simulation
- 1D Hydroacoustic pipe flows is simulated in SIMSEN and resulting discharge and pressure level are transferred as new boundary conditions in 3D CFD computation

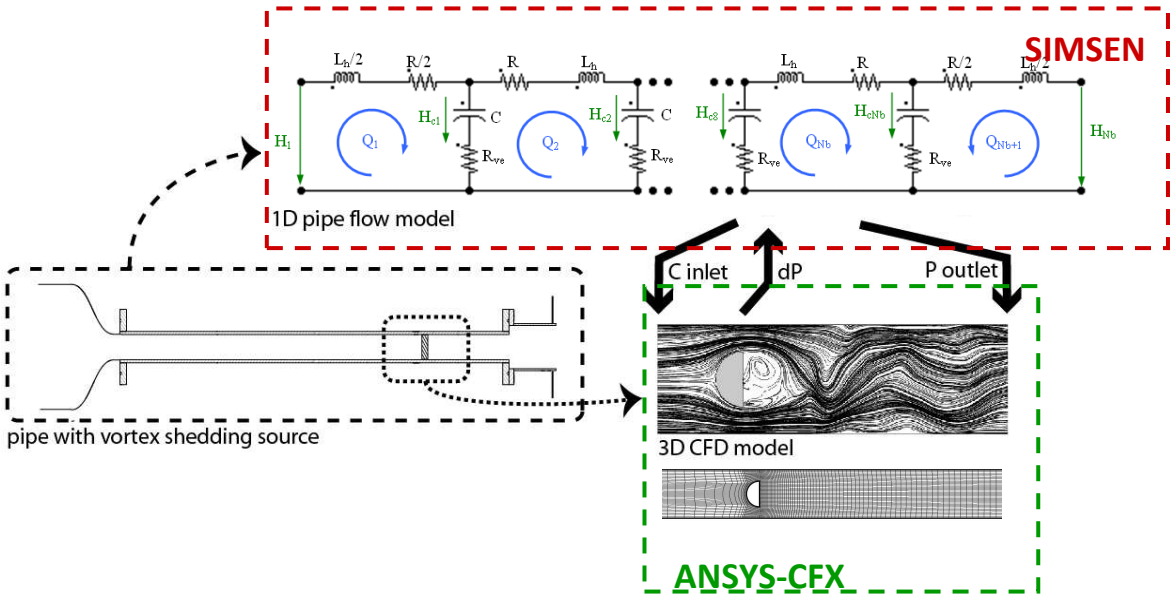

SIMSEN Users and Partners

SIMSEN Contacts

ÉCOLE POLYTECHNIQUE FÉDÉRALE DE LAUSANNE

Ecole Polytechnique Fédérale de Lausanne
CH-1015 Lausanne
Switzerland
http://simsen.epfl.ch
simsen@epfl.ch

For distribution, support and trainings:

Power Vision Engineering Sàrl
Ch. Des Champs-Courbes 1
CH-1024 Ecublens
Switzerland
http://www.powervision-eng.ch
info@powervision-eng.ch

Demo version available on:
http://simsen.epfl.ch

13.08.2013